Yale®

GRADE 1 MORTISE LOCKSET

8800 SERIES

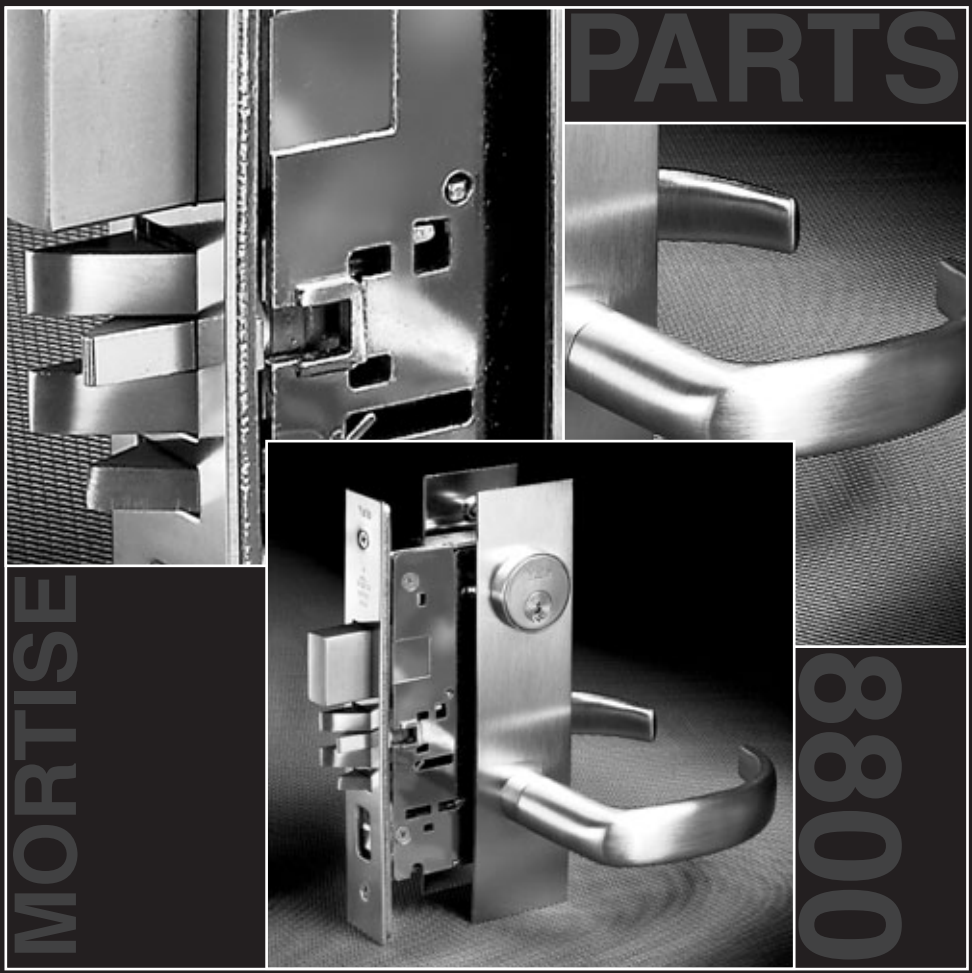

PARTS & SERVICE MANUAL

An ASSA ABLOY Group brand

ASSA ABLOY

HOW TO ORDER PARTS

To order parts, use the appropriate part number and specify finish if necessary.

For example, to order 10 curved lip strikes for any function:

Quantity	Part Number	Description
10	50-8800-2023-FIN	Strike, Curved Lip

To order 10 cylinder latch levers for an Entrance Function (8807):

Quantity	Part Number	Description
10	50-8899-0010	Cylinder Latch Lever

For further assistance, contact your authorized Yale distributor or contact Yale directly at (800) 438-1951.

FINISH CHART

ANSI Code	Finish Description	Roses	Levers	Armor Fronts/Strikes
605	Bright Brass, Clear Coated	003	003	003
605e	Bright Brass, PVD	003	003	003
606	Satin Brass, Clear Coated	004	004	004
606e	Satin Brass, PVD	004	004	004
609	Satin Brass, Blackened, Satin Relieved, Clear Coated	609	609	009
611	Bright Bronze, Clear Coated	009	009	009
612	Satin Bronze, Clear Coated	010	010	010
613	Satin Bronze, Oxidized & Oil Rubbed	007	007	007
613e	Satin Bronze, Oxidized, PVD	007	007	007
616	Satin Bronze, Blackened, Satin Relieved, Clear Coated	616	616	616
619	Satin Nickel Plated, Clear Coated	619	619	619
625	Bright Chrome Plated	026	026	032
626	Satin Chrome Plated	025	025	033
629	Bright Stainless Steel	032	032	032
630	Satin Stainless Steel	033	033	033

FINISH CARE

8800 Series Mortise Locks are designed to provide the highest standard of product quality and performance. Care should be taken to ensure a long-lasting finish. When cleaning is required, use a soft damp cloth. Using lacquer thinners, caustic soaps, abrasive cleaners or polishes could damage the coating and result in tarnishing.

PVD LIFETIME FINISH

Physical Vapor Deposition (PVD) is a technologically advanced finish coating that provides the ultimate surface protection against environmental elements and everyday wear and tear. PVD matches clear coated finishes in appearance, yet surpasses them in durability. Yale® warrants all its PVD finishes against corrosion, tarnish, wear, discoloring and peeling for the lifetime of the part to which it has been applied. Ask your sales representative for specific warranty information.

MAINTENANCE

Yale® 8800 Series Mortise Locks are manufactured to be maintenance-free under normal operating conditions and environments. Subjection to extremely heavy traffic and/or particularly dusty and dirty environmental conditions, however, may eventually cause unsatisfactory operation due to slow-moving parts or sticking cylinders. In this case, it may be necessary to clean and

re-lubricate the lockset to maintain optimum performance. To clean the lockset mechanism, use a penetrating or solvent type lubricant to loosen sticking components, then lubricate with lithium grease. To free sticking or jammed cylinders, lubricate with graphite or a non-oily lubricant (such as Lock-EZE). Do not use petroleum-based lubricants in the cylinder keyway.

TABLE OF CONTENTS

How to Order Parts 2

Finish Chart 2

Lock Body Assemblies (by Function) 4-45

Function	ANSI	Description
8801	F01	Passage Latch
8802	F19	Privacy Lock
8805	F07	Storeroom or Closet Lock
8807	F04	Entrance Lock
8808	F05	Classroom Lock
8808-2	--	Double Cylinder Classroom Lock
8811-2	F33	Double Cylinder Classroom Deadbolt Lock
8812-2	F34	Double Cylinder Classroom Security Lock
8813ST	F29	Classroom Deadlock
8813ST-2	--	Double Cylinder Classroom Deadlock
8814	F18	Deadlock
8814-2	F16	Double Cylinder Deadlock
8815	F17	Deadlock
8817-2	F09	Apartment, Exit or Public Toilet Lock
8818-2	--	Classroom Security Intruder Lock
8820	F15	Hotel/Motel Lock
8822	F13	Dormitory Lock
8823	--	Storeroom Lock
8828	F31	Exit Latch
8829	--	Closet Lock
8830-2	F30	Asylum Lock
8832	--	Hotel/Motel Lock
8833	--	Exit Lock
8833-2	--	Double Cylinder All Purpose Lock
8847	F20	Entrance or Apartment Door Lock
8860	F21	Entrance or Storeroom Lock
8860-2	F14	Double Cylinder Entrance or Storeroom Lock
8861	--	Dormitory or Storeroom Lock
8862	F22	Bathroom Lock
8867	F12	Dormitory or Exit Lock

Installation Instructions 46

8801

ITEM	PART NUMBER	DESCRIPTION	QUANTITY
1	50-8800-X023	Strike, Curved Up	1
2	50-8801-X019	Armor Front	1
3	50-8800-0010	Reversible Latchbolt Assembly	1
9	50-8899-0001	Case Assembly	1
31	50-8899-0029	Machine Screw (8-32 x 5/16)	4
32	50-8800-1008	Cover	1
36	50-8899-0033	Fire Stop Assembly	1
37	50-8899-0034	Spring Cartridge Assembly	1
38	50-8800-1005	Cap Hub	1
39	50-8800-1011	Spacer, Hub	1
40	50-8800-1004	Case Hub	1
50	81-00X2-0404	Armor Front Screw	2
51	50-8800-1034	Knob Hub	2
52	50-4601-1005	Spacer, Hub (Knob Trim)	1
53	50-8899-0059	Latch Lever	1
54	50-8899-0061	Latch Lever Spring	1
55	50-8899-0060	Spacer Stop	1
56	50-8800-1031	SL Hub Spacer	1

8801

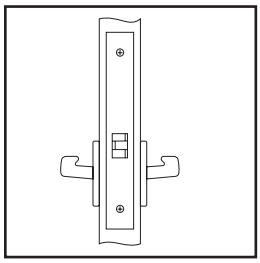

Passage Lock (F01)

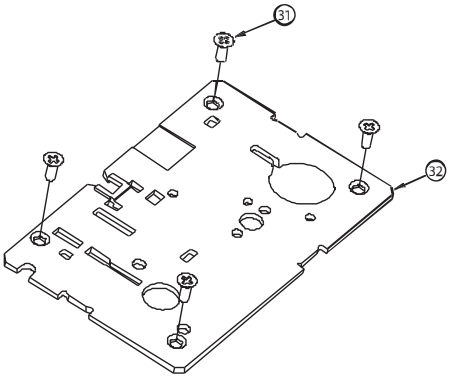

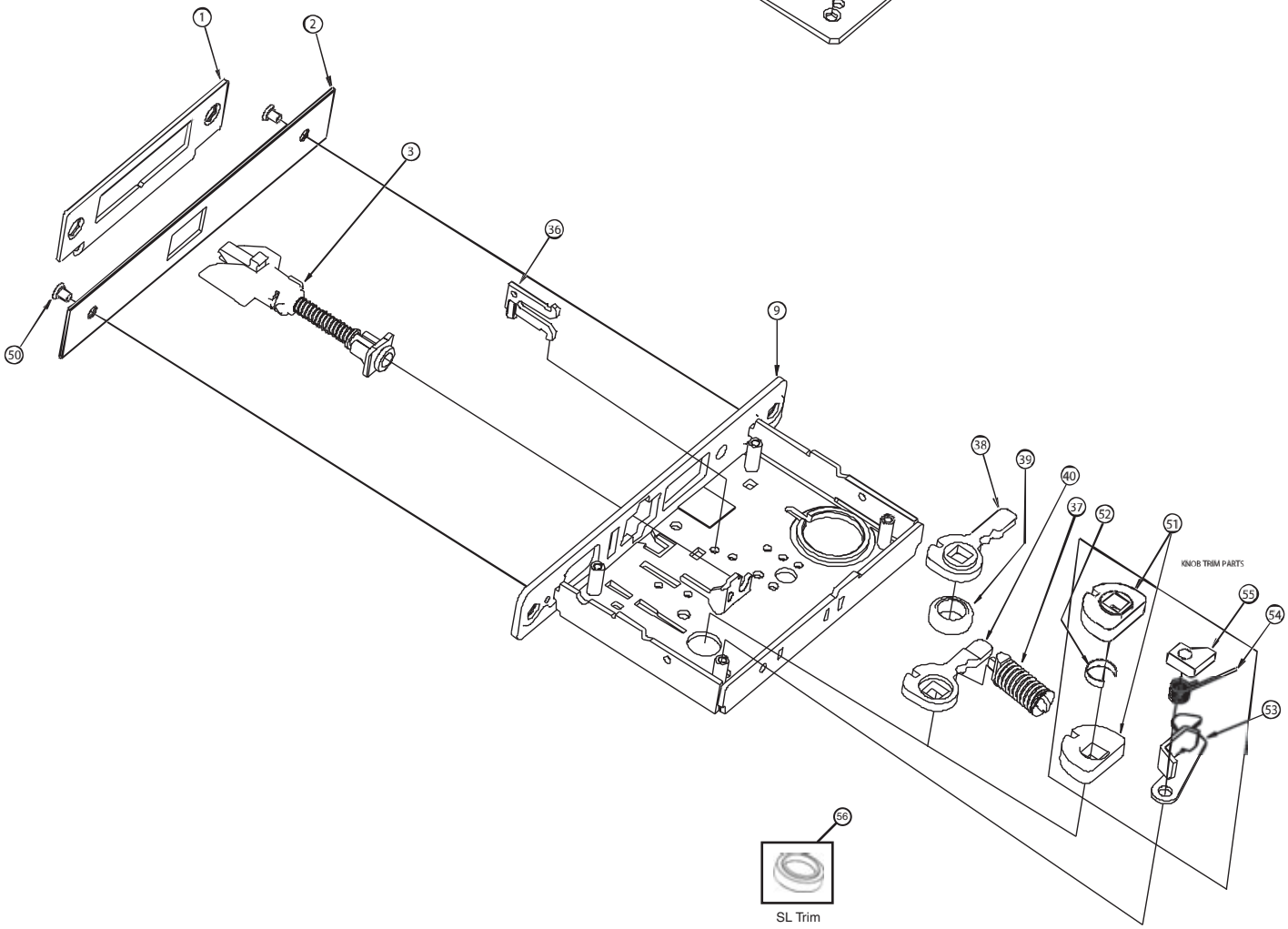

8802/8811-2/8822

ITEM	PART NUMBER	DESCRIPTION	QUANTITY
1	50-8800-2023	Strike, Curved Lip	1
2	50-8802-X019	Armor Front	1
3	50-8800-0010	Reversible Latchbolt Assembly	1
4	50-8899-0001	Auto Unlock Insert	1
5	50-8899-0002	Deadbolt Assembly	1
9	50-8800-0002	Case Assembly	1
17	50-8899-0014	Spacer (Classroom)	1
21	50-8800-1120	Deadbolt Hub	1
23	50-8899-0018	Deadbolt Arm	1
24	50-8899-0019	Deadbolt Spring	1
25	50-8899-0020	Auto Retract Lever	1
26	50-8899-0021	Deadbolt Washer	1
28	50-8899-0023	Cylinder Retainer Assembly	1
31	50-8899-0029	Machine Screw (8-32 x 5/16)	4
32	50-8800-1008	Cover	1
35	50-8899-0032	Unlock Spring	1
36	50-8899-0033	Fire Stop Assembly	1
37	50-8899-0034	Spring Cartridge Assembly	1
38	50-8800-1005	Cap Hub	1
39	50-8800-1011	Spacer, Hub	1
40	50-8800-1004	Case Hub	1
42	50-8899-0036	Locking Piece Assembly	1
50	81-00X2-0404	Armor Front Screw	2
51	50-8800-1034	Knob Hub	2
52	50-4601-1005	Knob Hub Spacer	1
53	50-8899-0059	Latch Lever	1
54	50-8899-0061	Latch Lever Spring	1
55	50-8899-0060	Spacer Stop	1
56	50-8800-1031	SL Hub Spacer	1

8802/8811-2/8822

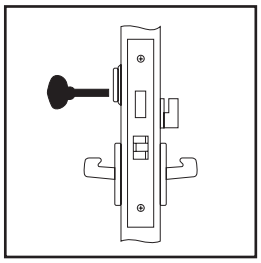

Privacy Lock (F19)
Dormitory Lock (F13)

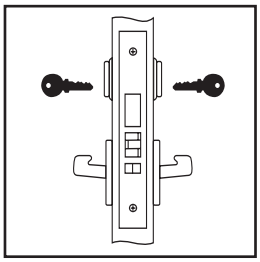

Classroom Deadbolt Lock
(F33)

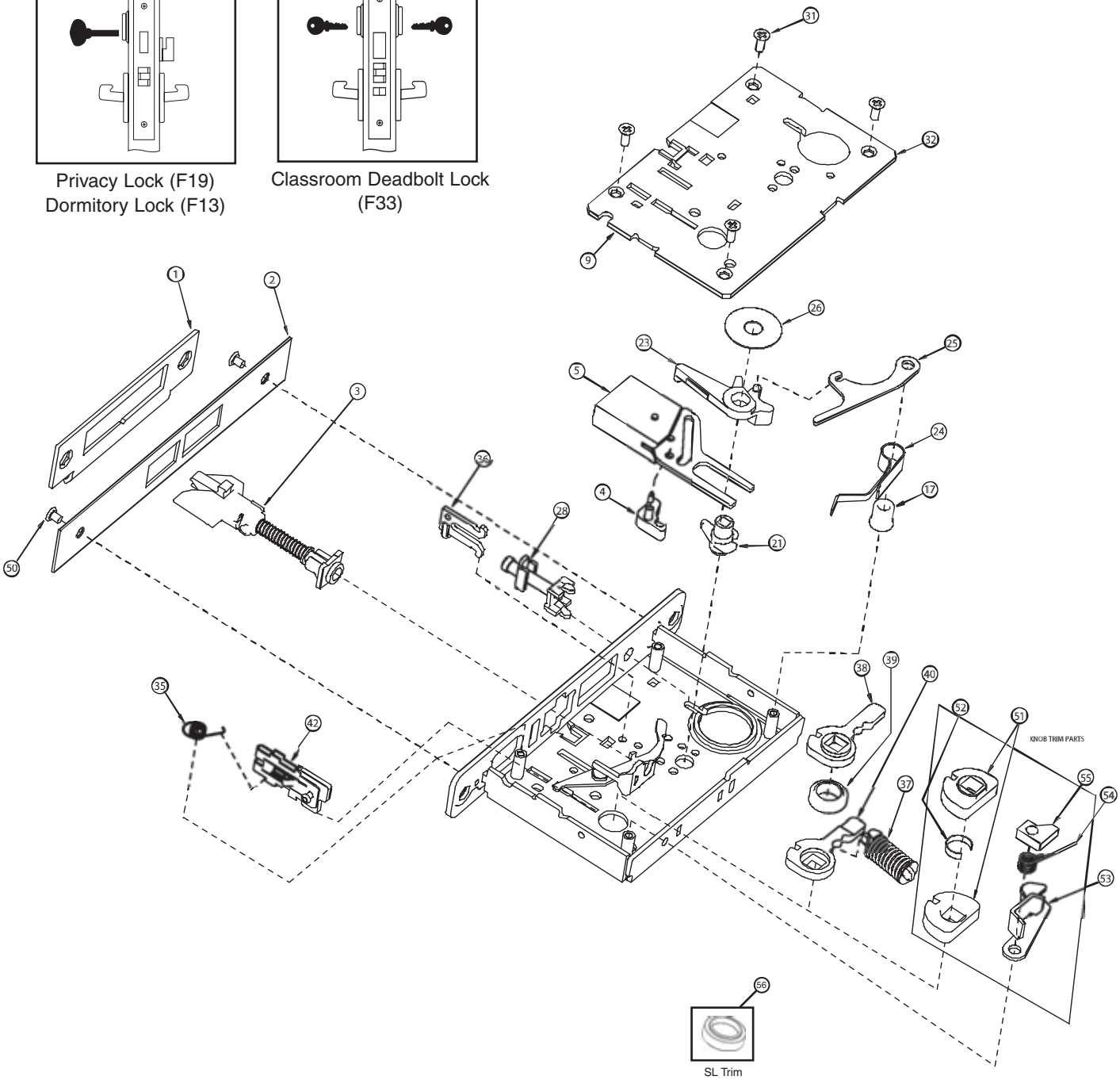

8805

ITEM	PART NUMBER	DESCRIPTION	QUANTITY
1	50-8800-2023	Strike, Curved Lip	1
2	50-8805-X019	Armor Front	1
3	50-8800-0010	Reversible Latchbolt Assembly	1
7	50-8899-0007	Guard Lever	1
8	50-8899-0008	Guard Lever Spring	1
9	50-8800-0001	Case Assembly	1
11	50-8899-0010	Cylinder Latch Lever	1
16	50-8899-0015	Spacer (1/2 Width)	1
28	50-8899-0023	Cylinder Retainer Assembly	1
31	50-8899-0029	Machine Screw (8-32 x 5/16)	4
32	50-8800-1008	Cover	1
33	50-8899-0030	Locking Piece Jamb	1
36	50-8899-0033	Fire Stop Assembly	1
37	50-8899-0034	Spring Cartridge Assembly	1
38	50-8800-1005	Cap Hub	1
39	50-8800-1011	Spacer, Hub	1
40	50-8800-1004	Case Hub	1
42	50-8899-0036	Locking Piece Assembly	1
46	50-8899-0039	Guardbolt Spring	1
47	50-8899-0040	Spring Guide	1
48	50-8800-1016	Guardbolt Guide	1
49	50-8800-7014	Guardbolt	1
50	81-00X2-0404	Armor Front Screw	2
51	50-8800-1034	Knob Hub	2
52	50-4601-1005	Knob Hub Spacer	1
53	50-8899-0059	Latch Lever	1
54	50-8899-0061	Latch Lever Spring	1
55	50-8899-0060	Spacer Stop	1
56	50-8800-1031	SL Hub Spacer	1

8805

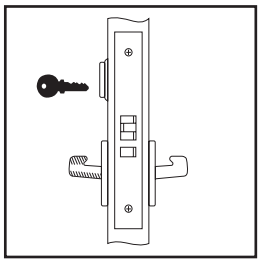

Storeroom or
Closet Lock (F07)

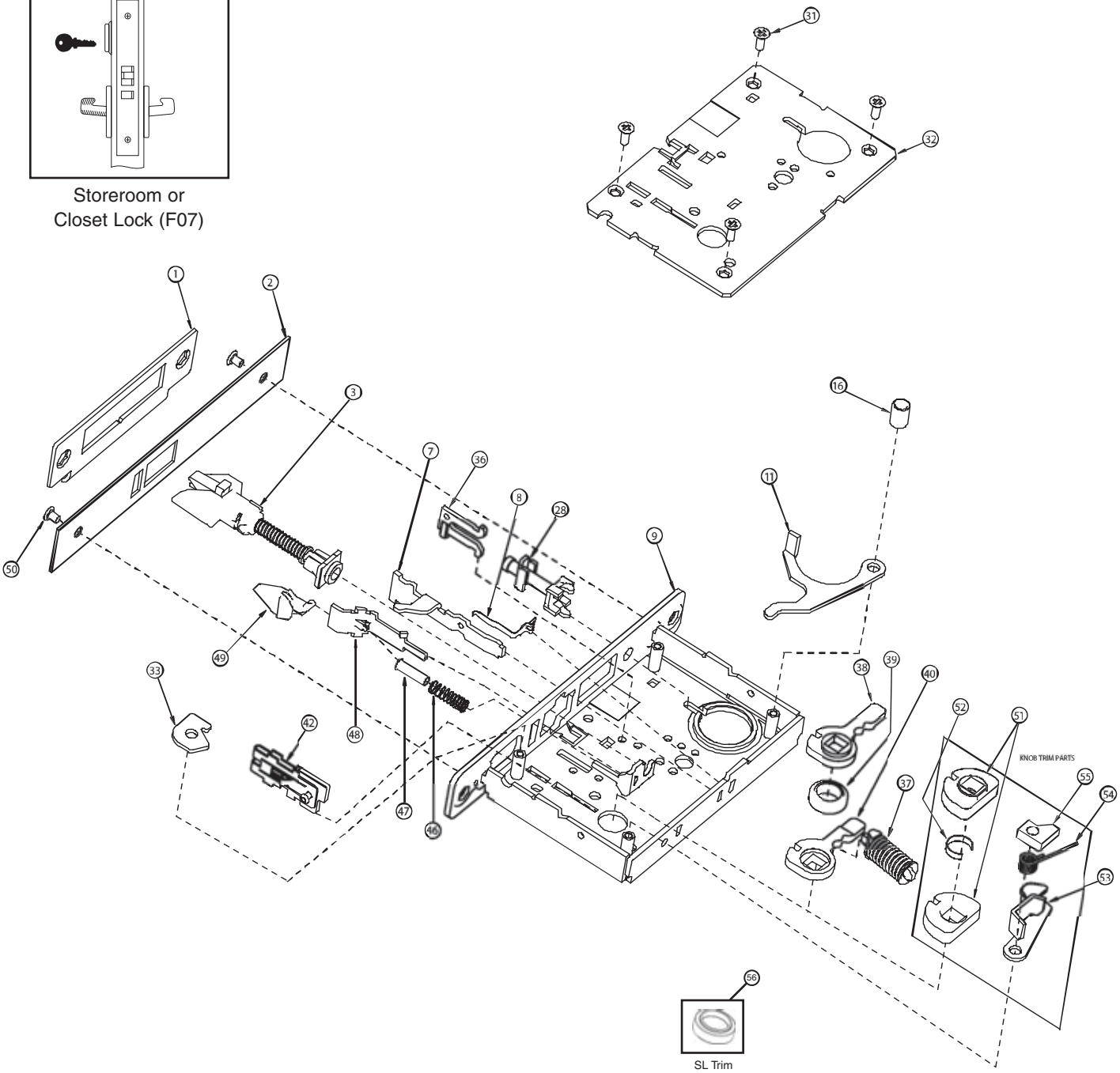

8807

ITEM	PART NUMBER	DESCRIPTION	QUANTITY
1	50-8800-2023	Strike, Curved Lip	1
2	50-8807-X019	Armor Front	1
3	50-8800-0010	Reversible Latchbolt Assembly	1
7	50-8899-0007	Guard Lever	1
8	50-8899-0008	Guard Lever Spring	1
9	50-8800-0002	Case Assembly	1
11	50-8899-0010	Cylinder Latch Lever	1
16	50-8899-0015	Spacer (1/2 Width)	1
28	50-8899-0023	Cylinder Retainer Assembly	1
31	50-8899-0029	Machine Screw (8-32 x 5/16)	4
32	50-8800-1008	Cover	1
34	50-8899-0031	Toggle Spring	1
36	50-8899-0033	Fire Stop Assembly	1
37	50-8899-0034	Spring Cartridge Assembly	1
38	50-8800-1005	Cap Hub	1
39	50-8800-1011	Spacer, Hub	1
40	50-8800-1004	Case Hub	1
41	50-8899-0035	Connector Pin, Toggle Button	1
42	50-8899-0036	Locking Piece Assembly	1
44	50-8899-0038	Toggle Washer	2
45	50-8800-6003	Stopworks Button	1
46	50-8899-0039	Guardbolt Spring	1
47	50-8899-0040	Spring Guide	1
48	50-8800-1016	Guardbolt Guide	1
49	50-8800-7014	Guardbolt	1
50	81-00X2-0404	Armor Front Screw	2
51	50-8800-1034	Knob Hub	2
52	50-4601-1005	Knob Hub Spacer	1
53	50-8899-0059	Latch Lever	1
54	50-8899-0061	Latch Lever Spring	1
55	50-8899-0060	Spacer Stop	1
56	50-8800-1031	SL Hub Spacer	1

8807

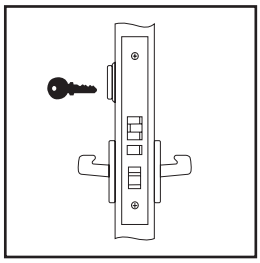

Entrance Lock (F04)

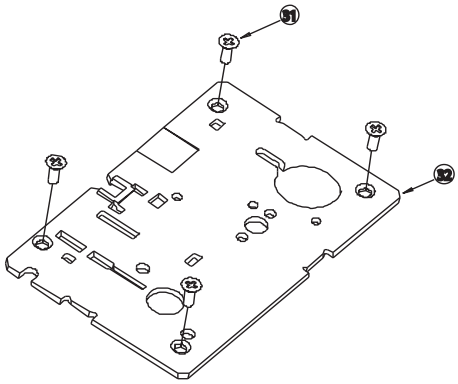

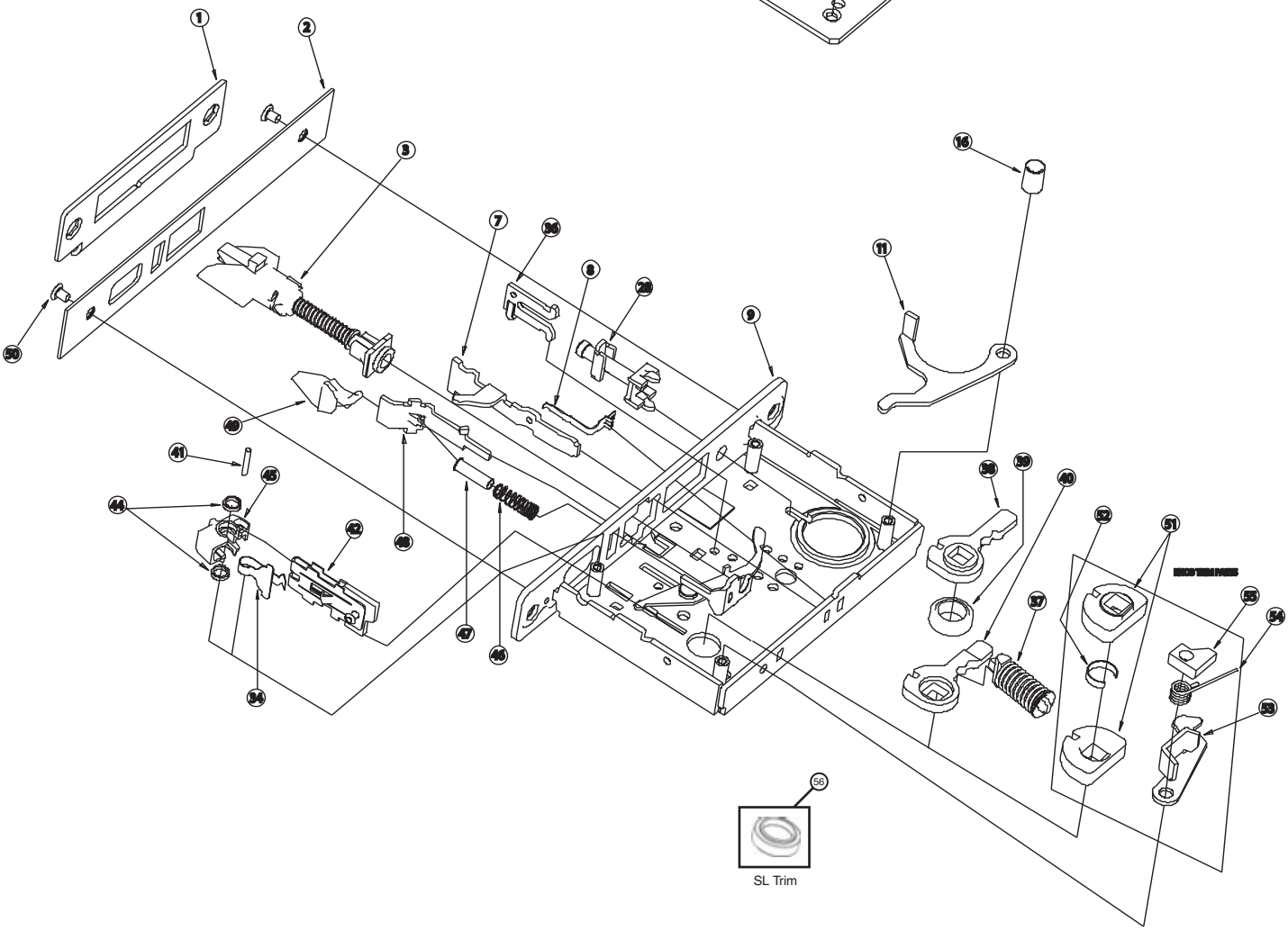

SL Trim

8808/8808-2

ITEM	PART NUMBER	DESCRIPTION	QUANTITY
1	50-8800-2023	Strike, Curved Lip	1
2	50-8805-X019	Armor Front	1
3	50-8800-0010	Reversible Latchbolt Assembly	1
7	50-8899-0007	Guard Lever	1
8	50-8899-0008	Guard Lever Spring	1
9	50-8800-0003	Case Assembly	1
12	50-8899-0011	Cylinder Latch Lever	1
15	50-8899-0014	Spacer (Classroom)	1
20	50-8800-1015	Classroom Hub	1
22	50-8899-0017	Classroom Spring	1
28	50-8899-0023	Cylinder Retainer Assembly	1
31	50-8899-0029	Machine Screw (8-32 x 5/16)	4
32	50-8800-1008	Cover	1
34	50-8899-0031	Toggle Spring	1
36	50-8899-0033	Fire Stop Assembly	1
37	50-8899-0034	Spring Cartridge Assembly	1
38	50-8800-1005	Cap Hub	1
39	50-8800-1011	Spacer, Hub	1
40	50-8800-1004	Case Hub	1
42	50-8899-0036	Locking Piece Assembly	1
46	50-8899-0039	Guardbolt Spring	1
47	50-8899-0040	Spring Guide	1
48	50-8800-1016	Guardbolt Guide	1
49	50-8800-7014	Guardbolt	1
50	81-00X2-0404	Armor Front Screw	2
51	50-8800-1034	Knob Hub	2
52	50-4601-1005	Knob Hub Spacer	1
53	50-8899-0059	Latch Lever	1
54	50-8899-0061	Latch Lever Spring	1
55	50-8899-0060	Spacer Stop	1
56	50-8800-1031	SL Hub Spacer	1

8808/8808-2

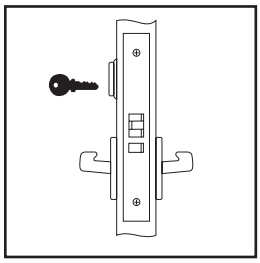

Classroom Lock (F05)

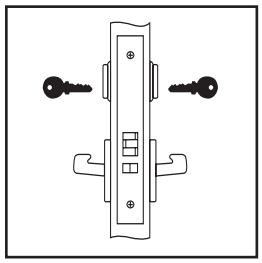

Classroom Lock (F32)

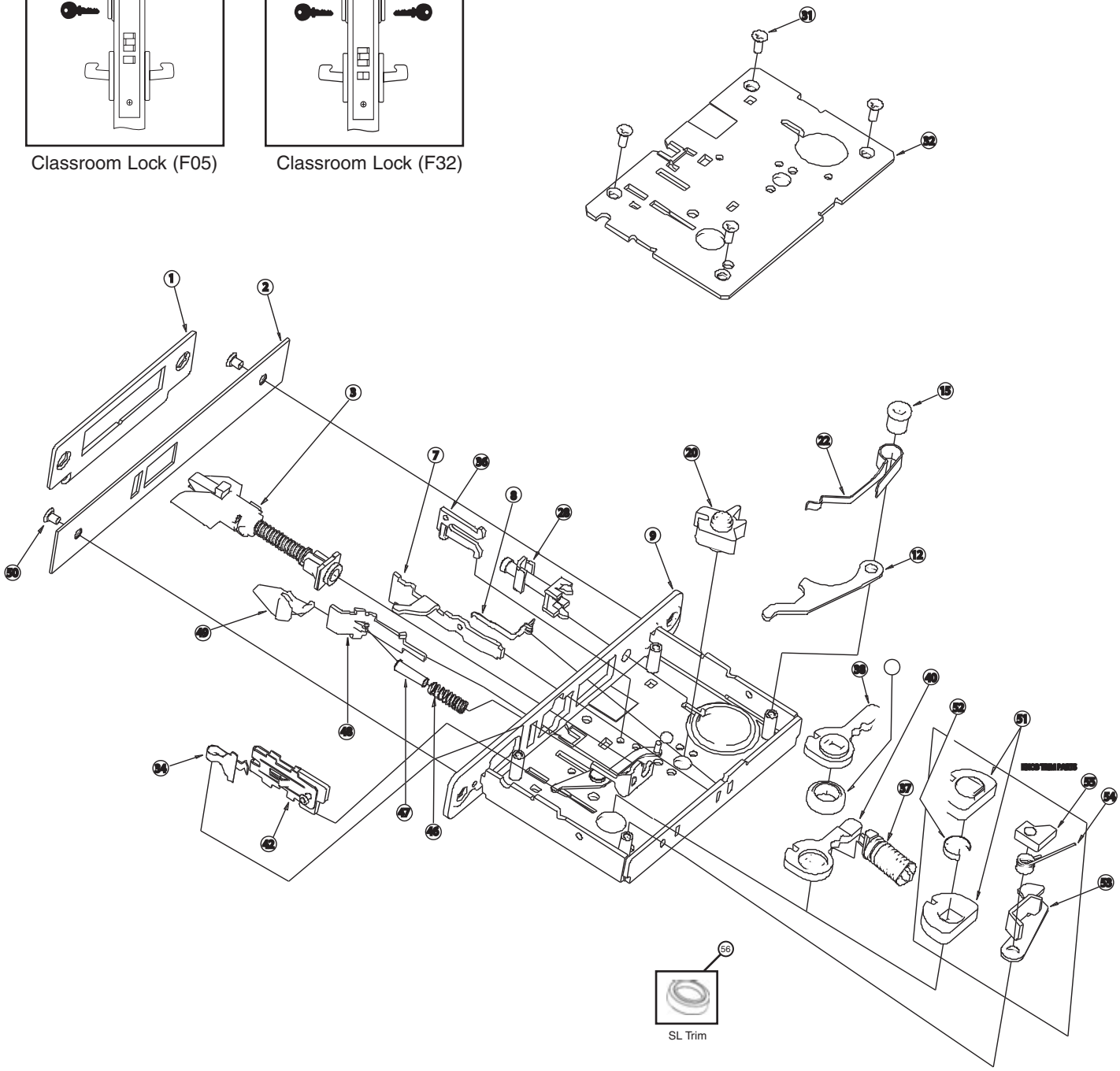

8812-2

ITEM	PART NUMBER	DESCRIPTION	QUANTITY
1	50-8800-2020	Strike, Curved Lip	1
2	50-8820-X019	Armor Front	1
3	50-8800-0010	Reversible Latchbolt Assembly	1
4	50-8899-0001	Auto Lock Insert	1
5	50-8899-0002	Deadbolt Assembly	1
7	50-8899-0007	Guard Lever	1
8	50-8899-0008	Guard Lever Spring	1
9	50-8800-0002	Case Assembly	1
17	50-8899-0014	Spacer (Classroom)	1
21	50-8800-1120	Deadbolt Hub	1
23	50-8899-0018	Deadbolt Arm	1
24	50-8899-0019	Deadbolt Spring	1
25	50-8899-0020	Auto Retract Lever	1
26	50-8899-0021	Deadbolt Washer	1
28	50-8899-0023	Cylinder Retainer Assembly	1
31	50-8899-0029	Machine Screw (8-32 x 5/16)	4
32	50-8800-1008	Cover	1
35	50-8899-0032	Unlock Spring	1
36	50-8899-0033	Fire Stop Assembly	1
37	50-8899-0034	Spring Cartridge Assembly	1
38	50-8800-1005	Cap Hub	1
39	50-8800-1011	Spacer, Hub	1
40	50-8800-1004	Case Hub	1
42	50-8899-0036	Locking Piece Assembly	1
46	50-8899-0039	Guardbolt Spring	1
47	50-8899-0040	Spring Guide	1
48	50-8800-1016	Guardbolt Guide	1
49	50-8800-7014	Guardbolt	1
50	81-00X2-0404	Armor Front Screw	2
51	50-8800-1034	Knob Hub	2
52	50-4601-1005	Knob Hub Spacer	1
53	50-8899-0059	Latch Lever	1
54	50-8899-0061	Latch Lever Spring	1
55	50-8899-0060	Spacer Stop	1
56	50-8800-1031	SL Hub Spacer	1

8812-2

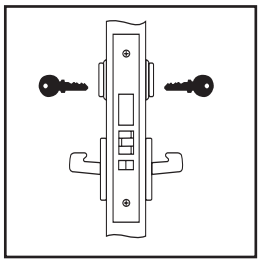

Classroom Security Lock (F34)

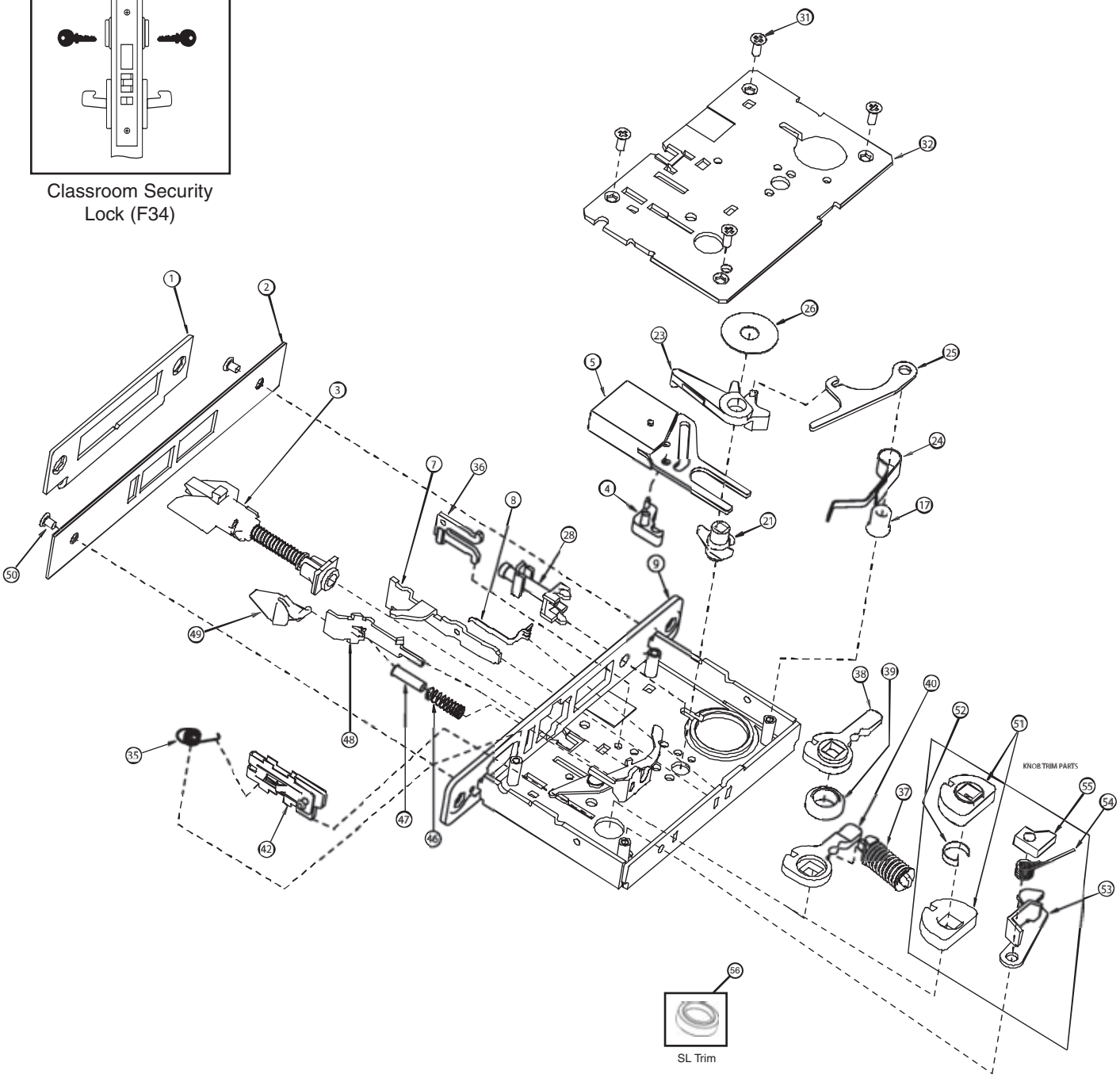

8813

ITEM	PART NUMBER	DESCRIPTION	QUANTITY
1	50-8800-2023	Strike, Curved Up	1
2	50-8813-X019	Armor Front	1
5	50-8899-0002	Deadbolt Assembly	1
9	50-8800-0001	Case Assembly	1
10	50-8899-0009	Washer	1
15	50-8899-0014	Spacer (Classroom)	1
19	50-8800-7017	Hub Core	1
23	50-8899-0018	Deadbolt Arm	1
24	50-8899-0019	Deadbolt Spring	1
28	50-8899-0023	Cylinder Retainer Assembly	1
29	50-8899-0024	Post	1
31	50-8899-0029	Machine Screw (8-32 x x5/16)	4
32	50-8800-1008	Cover	1
50	81-00X2-0404	Armor Front Screw	2

8813

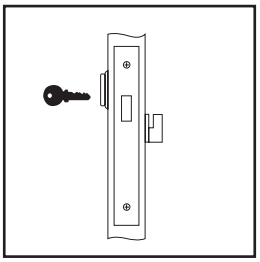

Classroom Deadlock

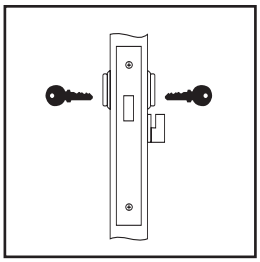

Classroom Deadlock

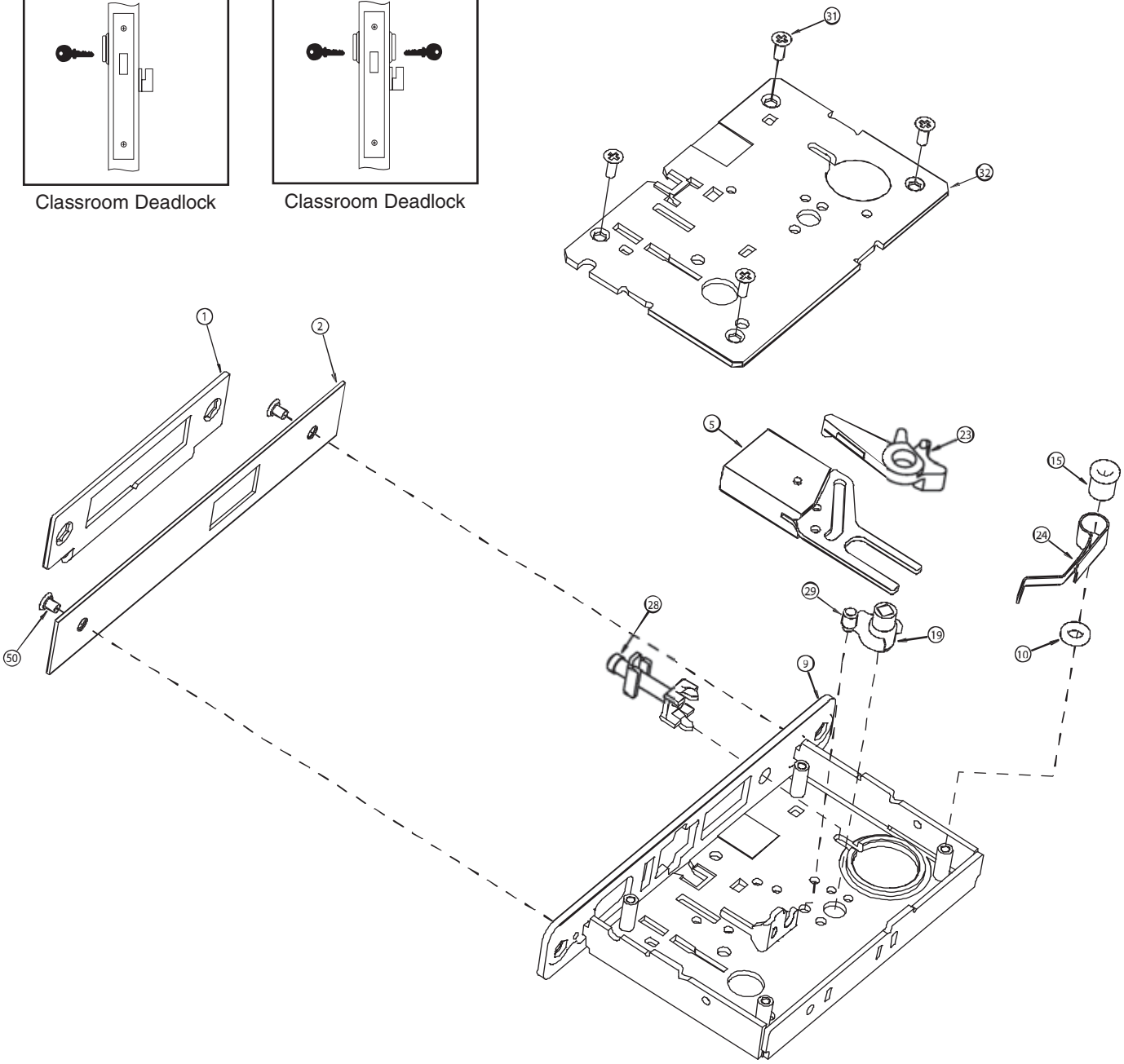

8814/8815

ITEM	PART NUMBER	DESCRIPTION	QUANTITY
1	50-8800-2023	Strike, Curved Up	1
2	50-8813-X019	Armor Front	1
5	50-8899-0002	Deadbolt Assembly	1
9	50-8800-0001	Case Assembly	1
10	50-8899-0009	Washer	1
15	50-8899-0014	Spacer (Classroom)	1
21	50-8800-1120	Deadbolt Hub	1
23	50-8899-0018	Deadbolt Arm	1
24	50-8899-0019	Deadbolt Spring	1
28	50-8899-0023	Cylinder Retainer Assembly	1
31	50-8899-0029	Machine Screw (8-32 x x5/16)	4
32	50-8800-1008	Cover	1
50	81-00X2-0404	Armor Front Screw	2

8814/8815

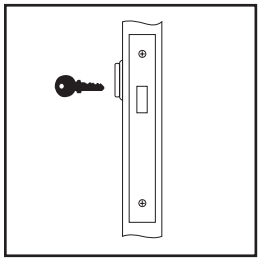

Deadlock (F18)

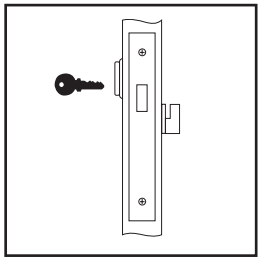

Deadlock (F17)

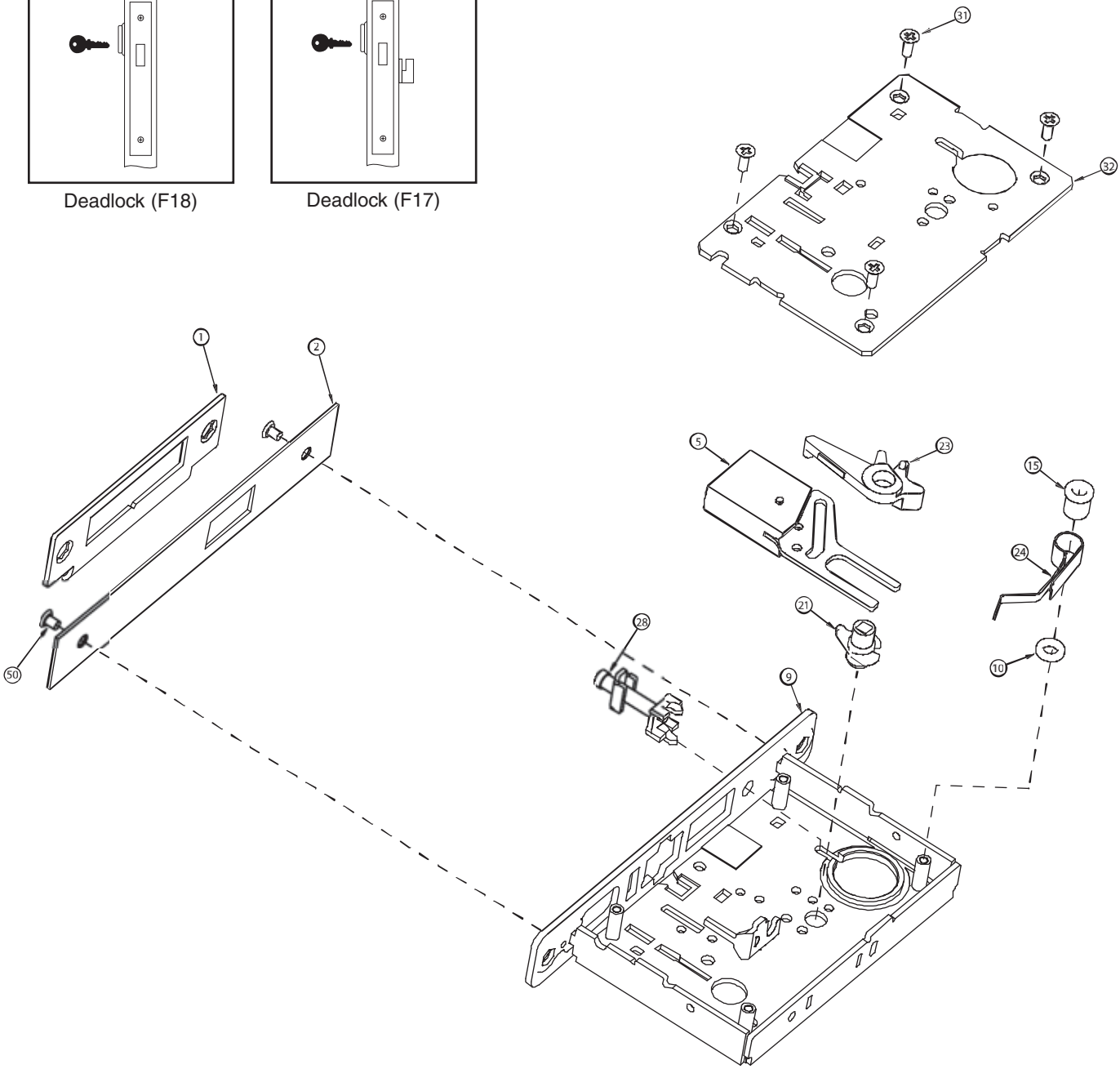

8817-2

ITEM	PART NUMBER	DESCRIPTION	QUANTITY
1	50-8800-2023	Strike, Curved Lip	1
2	50-8805-X019	Armor Front	1
3	50-8800-0010	Reversible Latchbolt Assembly	1
7	50-8899-0007	Guard Lever	1
8	50-8899-0008	Guard Lever Spring	1
9	50-8800-0004	Case Assembly	1
11	50-8899-0010	Cylinder Latch Lever	1
16	50-8899-0015	Spacer (1/2 Width)	1
28	50-8899-0023	Cylinder Retainer Assembly	1
30	50-8899-0025	Pivotal	1
31	50-8899-0029	Machine Screw (8-32 x 5/16)	4
32	50-8800-0022	Cover Assembly	1
34	50-8899-0031	Toggle Spring	1
36	50-8899-0033	Fire Stop Assembly	1
37	50-8899-0034	Spring Cartridge Assembly	1
38	50-8800-1005	Cap Hub	1
39	50-8800-1011	Spacer, Hub	1
40	50-8800-1004	Case Hub	1
42	50-8899-0036	Locking Piece Assembly	1
46	50-8899-0039	Guardbolt Spring	1
47	50-8899-0040	Spring Guide	1
48	50-8800-1016	Guardbolt Guide	1
49	50-8800-7014	Guardbolt	1
50	81-00X2-0404	Armor Front Screw	2
51	50-8800-1034	Knob Hub	2
52	50-4601-1005	Knob Hub Spacer	1
53	50-8899-0059	Latch Lever	1
54	50-8899-0061	Latch Lever Spring	1
55	50-8899-0060	Spacer Stop	1
56	50-8800-1031	SL Hub Spacer	1

8817-2

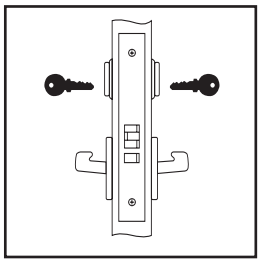

Apartment, Exit or
Public Toilet Lock
(F09)

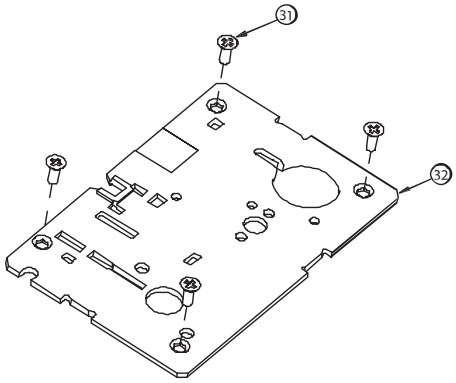

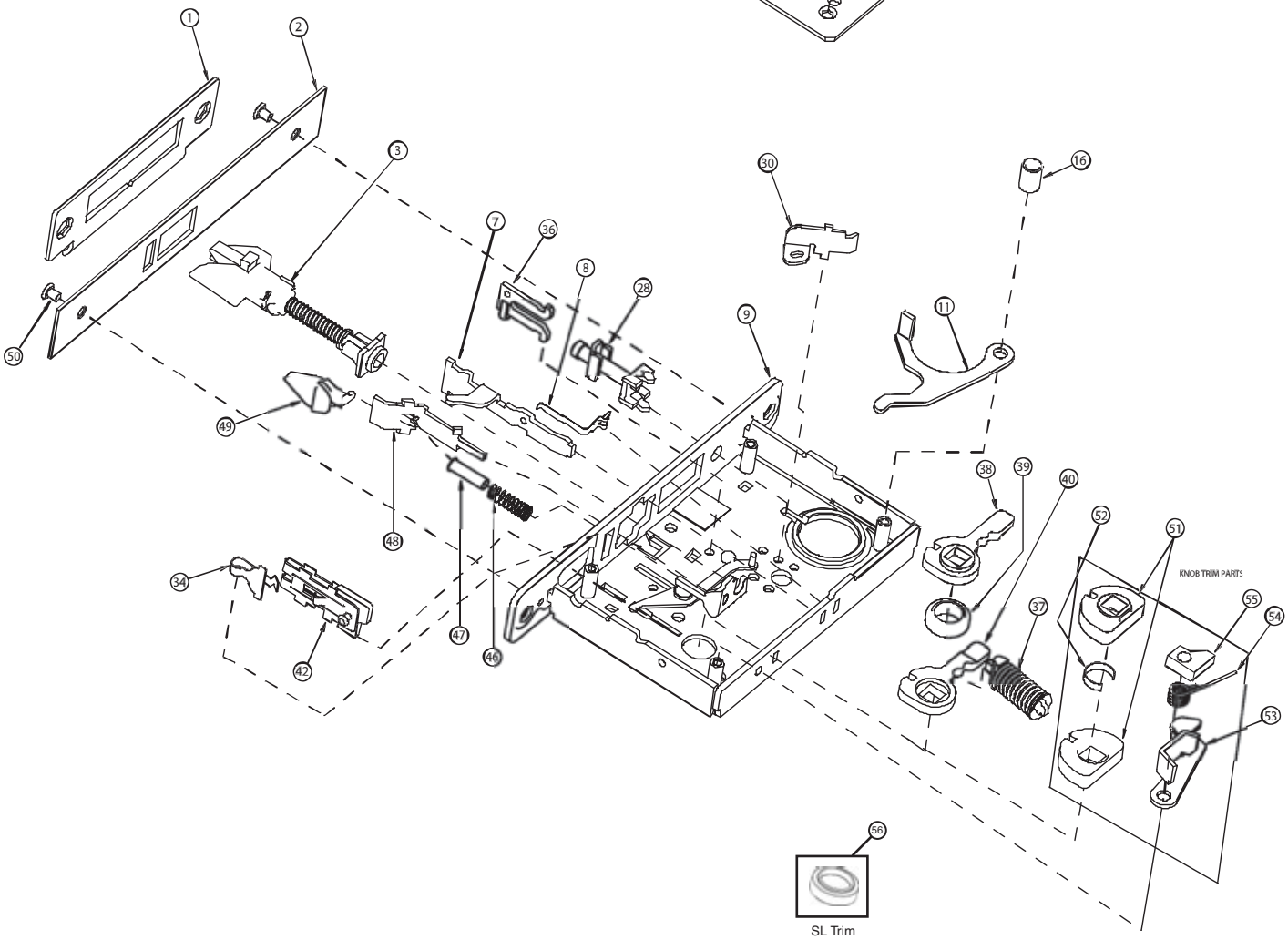

8818-2

ITEM	PART NUMBER	DESCRIPTION	QUANTITY
1	50-8800-2023	Strike, Curved Lip	1
2	50-8820-X019	Armor Front	1
3	50-8800-0010	Reversible Latchbolt Assembly	1
6	50-8800-0021	Deadbolt with Retraction Lever	1
7	50-8899-0007	Guard Lever	1
8	50-8899-0008	Guard Lever Spring	1
9	50-8800-0005	Case Assembly	1
13	50-8899-0012	Cylinder Latch Lever	1
18	50-8899-0016	Spacer (7/16 Width)	1
21	50-8800-1120	Deadbolt Hub	1
23	50-8899-0018	Deadbolt Arm	1
24	50-8899-0019	Deadbolt Spring	1
25	50-8899-0020	Auto Retract Lever	1
26	50-8899-0021	Deadbolt Washer	1
28	50-8899-0023	Cylinder Retainer Assembly	1
31	50-8899-0029	Machine Screw (8-32 x 5/16)	4
32	50-8800-1008	Cover	1
34	50-8899-0031	Toggle Spring	1
36	50-8899-0033	Fire Stop Assembly	1
37	50-8899-0034	Spring Cartridge Assembly	1
38	50-8800-1005	Cap Hub	1
39	50-8800-1011	Spacer, Hub	1
40	50-8800-1004	Case Hub	1
42	50-8899-0036	Locking Piece Assembly	1
46	50-8899-0039	Guardbolt Spring	1
47	50-8899-0040	Spring Guide	1
48	50-8800-1016	Guardbolt Guide	1
49	50-8800-7014	Guardbolt	1
50	81-00X2-0404	Armor Front Screw	2
51	50-8800-1034	Knob Hub	2
52	50-4601-1005	Knob Hub Spacer	1
53	50-8899-0059	Latch Lever	1
54	50-8899-0061	Latch Lever Spring	1
55	50-8899-0060	Spacer Stop	1
56	50-8800-1031	SL Hub Spacer	1

8818-2

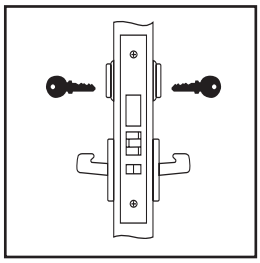

Classroom Security
Intruder Lock

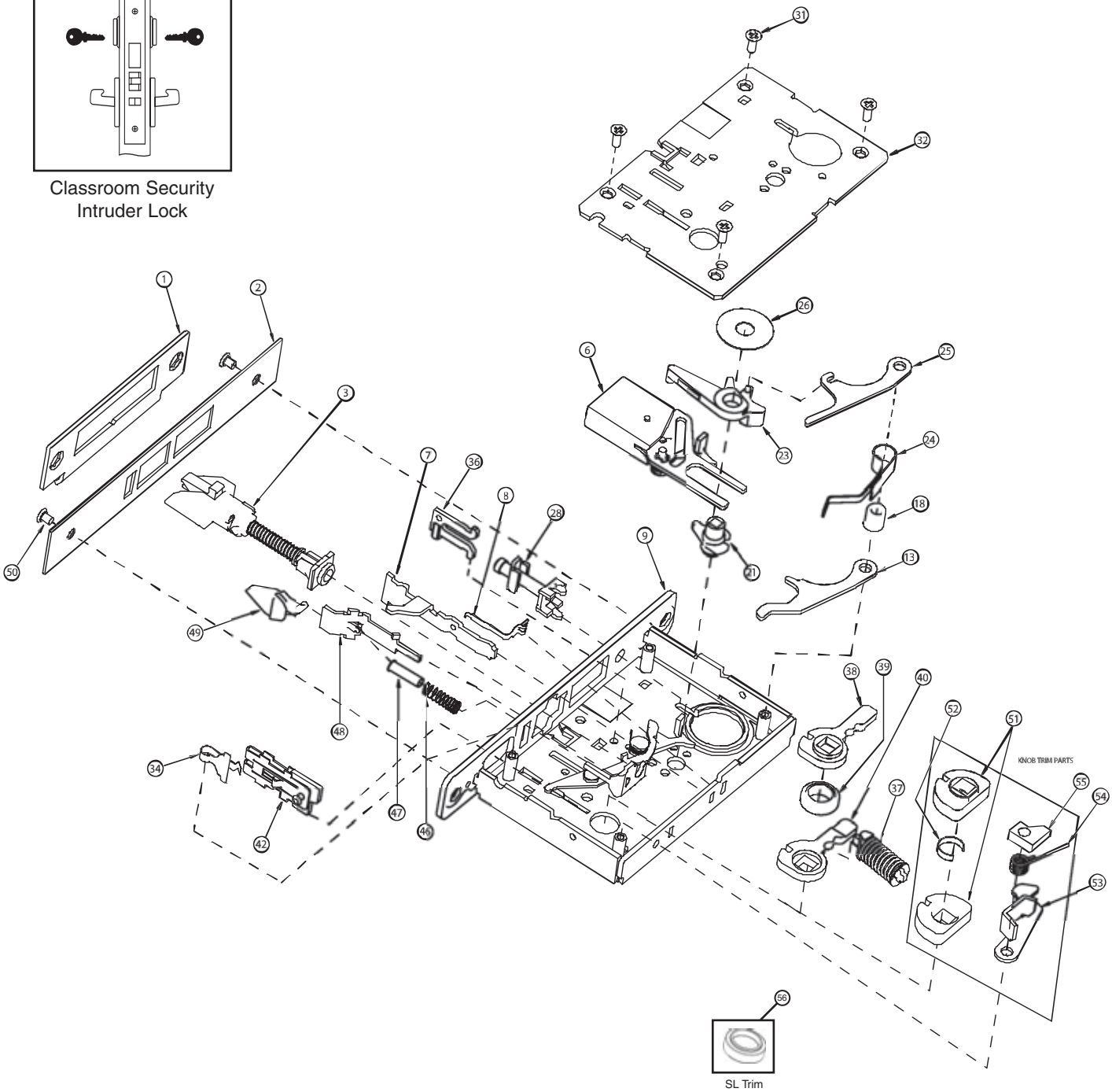

8820/8832

ITEM	PART NUMBER	DESCRIPTION	QUANTITY
1	50-8800-2023	Strike, Curved Lip	1
2	50-8820-X019	Armor Front	1
3	50-8800-0010	Reversible Latchbolt Assembly	1
6	50-8800-0021	Deadbolt with Retraction Lever	1
7	50-8899-0007	Guard Lever	1
8	50-8899-0008	Guard Lever Spring	1
9	50-8800-0002	Case Assembly	1
14	50-8899-0013	Cylinder Latch Lever	1
18	50-8899-0016	Spacer (7/16 Width)	1
21	50-8800-1120	Deadbolt Hub	1
23	50-8899-0018	Deadbolt Arm	1
24	50-8899-0019	Deadbolt Spring	1
25	50-8899-0020	Auto Retract Lever	1
26	50-8899-0021	Deadbolt Washer	1
28	50-8899-0023	Cylinder Retainer Assembly	1
31	50-8899-0029	Machine Screw (8-32 x 5/16)	4
32	50-8800-1008	Cover	1
33	50-8899-0030	Locking Piece Jamb	1
36	50-8899-0033	Fire Stop Assembly	1
37	50-8899-0034	Spring Cartridge Assembly	1
38	50-8800-1005	Cap Hub	1
39	50-8800-1011	Spacer, Hub	1
40	50-8800-1004	Case Hub	1
42	50-8899-0036	Locking Piece Assembly	1
46	50-8899-0039	Guardbolt Spring	1
47	50-8899-0040	Spring Guide	1
48	50-8800-1016	Guardbolt Guide	1
49	50-8800-7014	Guardbolt	1
50	81-00X2-0404	Armor Front Screw	2
51	50-8800-1034	Knob Hub	2
52	50-4601-1005	Knob Hub Spacer	1
53	50-8899-0059	Latch Lever	1
54	50-8899-0061	Latch Lever Spring	1
55	50-8899-0060	Spacer Stop	1
56	50-8800-1031	SL Hub Spacer	1

8820/8832

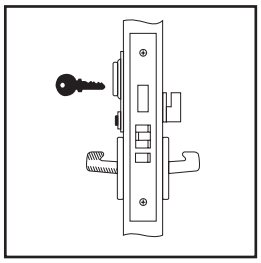

Hotel/Motel Lock
(F15)

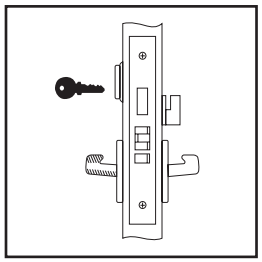

Hotel/Motel Lock

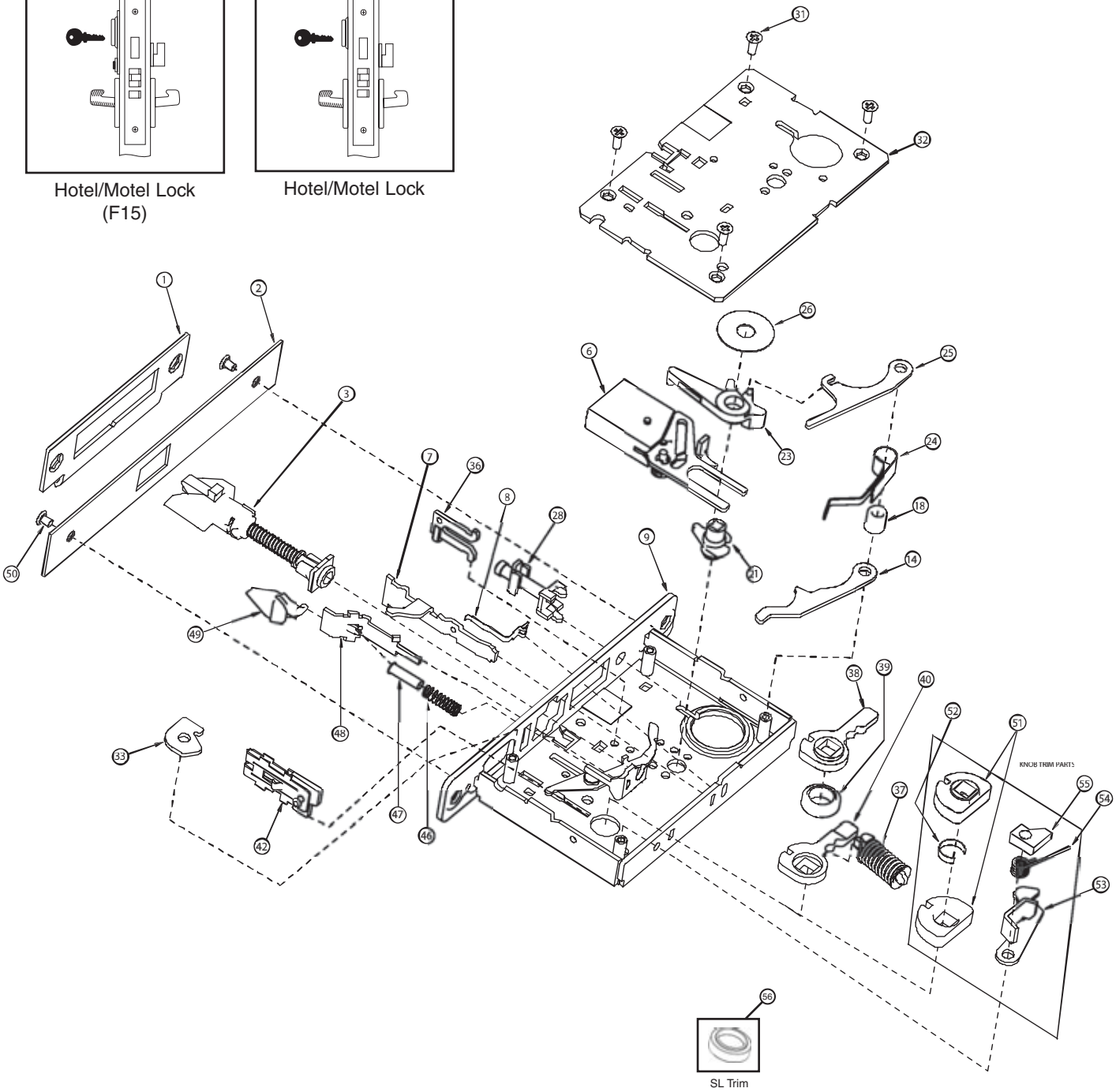

8823

ITEM	PART NUMBER	DESCRIPTION	QUANTITY
1	50-8800-2023	Strike, Curved Lip	1
2	50-8802-X019	Armor Front	1
3	50-8800-0010	Reversible Latchbolt Assembly	1
4	50-8899-0001	Auto Unlock Insert	1
5	50-8899-0002	Deadbolt Assembly	1
9	50-8800-0001	Case Assembly	1
10	50-8899-0009	Washer	1
15	50-8899-0014	Spacer (Classroom)	1
21	50-8800-1120	Deadbolt Hub	1
23	50-8899-0018	Deadbolt Arm	1
24	50-8899-0019	Deadbolt Spring	1
28	50-8899-0023	Cylinder Retainer Assembly	1
31	50-8899-0029	Machine Screw (8-32 x 5/16)	4
32	50-8800-1008	Cover	1
35	50-8899-0032	Unlock Spring	1
36	50-8899-0033	Fire Stop Assembly	1
37	50-8899-0034	Spring Cartridge Assembly	1
38	50-8800-1005	Cap Hub	1
39	50-8800-1011	Spacer, Hub	1
40	50-8800-1004	Case Hub	1
43	50-8899-0036	Locking Piece Assembly (Solid)	1
50	81-00X2-0404	Armor Front Screw	2
51	50-8800-1034	Knob Hub	2
52	50-4601-1005	Knob Hub Spacer	1
53	50-8899-0059	Latch Lever	1
54	50-8899-0061	Latch Lever Spring	1
55	50-8899-0060	Spacer Stop	1
56	50-8800-1031	SL Hub Spacer	1

8823

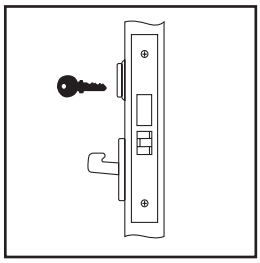

Storeroom Lock

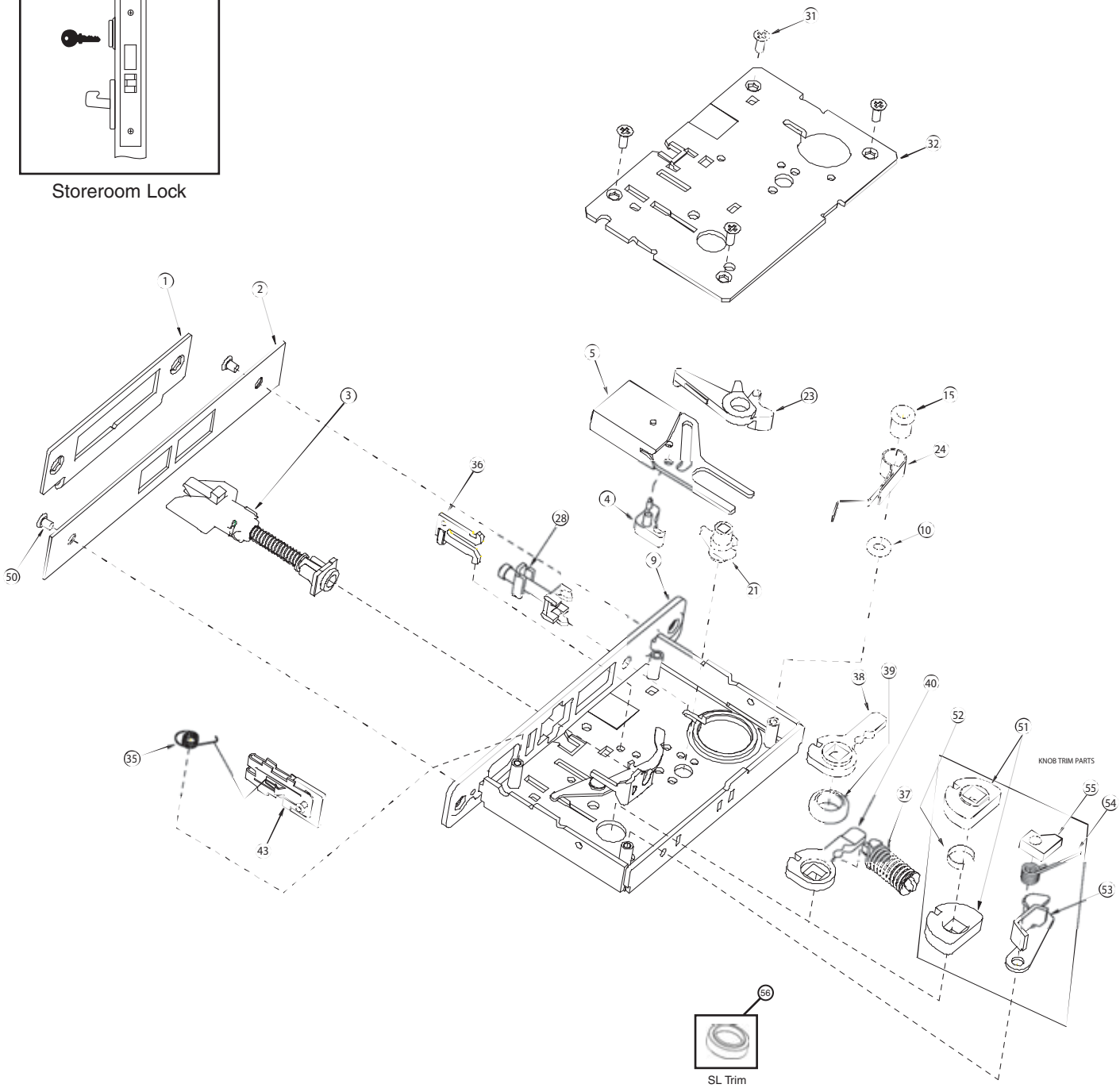

8828

ITEM	PART NUMBER	DESCRIPTION	QUANTITY
1	50-8800-2023	Strike, Curved Lip	1
2	50-8805-X019	Armor Front	1
3	50-8800-0010	Reversible Latchbolt Assembly	1
7	50-8899-0007	Guard Lever	1
8	50-8899-0008	Guard Lever Spring	1
9	50-8800-0001	Case Assembly	1
31	50-8899-0029	Machine Screw (8-32 x 5/16)	4
32	50-8800-1008	Cover	1
36	50-8899-0033	Fire Stop Assembly	1
37	50-8899-0034	Spring Cartridge Assembly	1
38	50-8800-1005	Cap Hub	1
39	50-8800-1011	Spacer, Hub	1
40	50-8800-1004	Case Hub	1
46	50-8899-0039	Guardbolt Spring	1
47	50-8899-0040	Spring Guide	1
48	50-8800-1016	Guardbolt Guide	1
49	50-8800-7014	Guardbolt	1
50	81-00X2-0404	Armor Front Screw	2
51	50-8800-1034	Knob Hub	2
52	50-4601-1005	Knob Hub Spacer	1
53	50-8899-0059	Latch Lever	1
54	50-8899-0061	Latch Lever Spring	1
55	50-8899-0060	Spacer Stop	1
56	50-8800-1031	SL Hub Spacer	1

8828

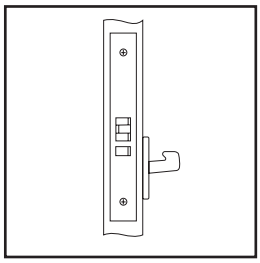

Exit Latch (F31)

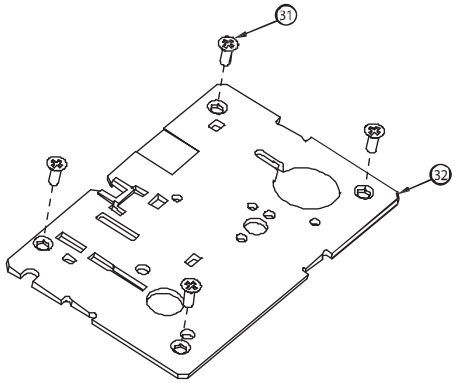

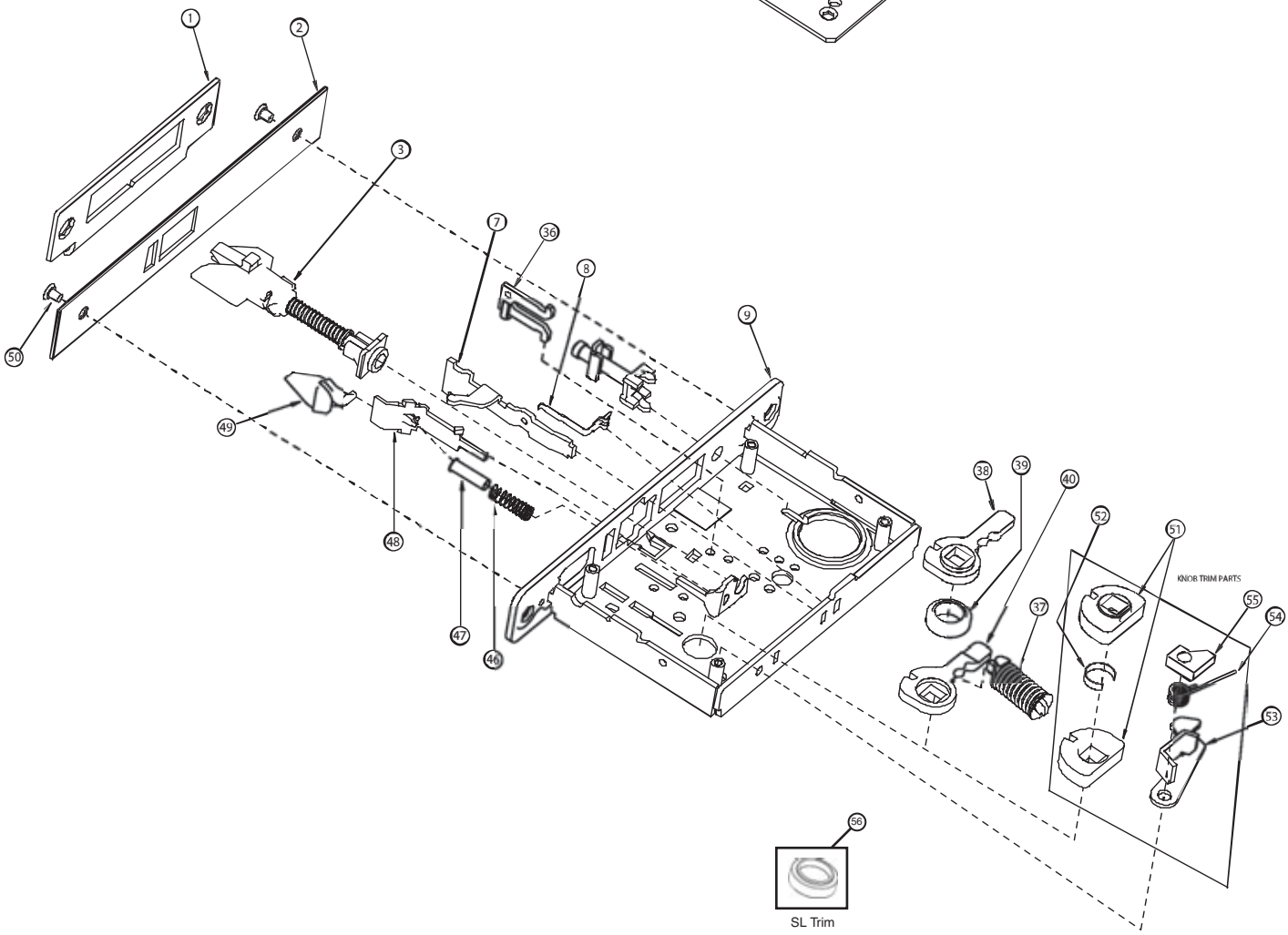

SL Trim

8829

ITEM	PART NUMBER	DESCRIPTION	QUANTITY
1	50-8800-2023	Strike, Curved Lip	1
2	50-8805-X019	Armor Front	1
3	50-8800-0010	Reversible Latchbolt Assembly	1
7	50-8899-0007	Guard Lever	1
8	50-8899-0008	Guard Lever Spring	1
9	50-8800-0004	Case Assembly	1
28	50-8899-0023	Cylinder Retainer Assembly	1
30	50-8899-0025	Pivotal	1
31	50-8899-0029	Machine Screw (8-32 x 5/16)	4
32	50-8800-1008	Cover	1
34	50-8899-0031	Toggle Spring	1
36	50-8899-0033	Fire Stop Assembly	1
37	50-8899-0034	Spring Cartridge Assembly	1
38	50-8800-1005	Cap Hub	1
39	50-8800-1011	Spacer, Hub	1
40	50-8800-1004	Case Hub	1
43	50-8899-0036	Locking Piece Assembly (Solid)	1
46	50-8899-0039	Guardbolt Spring	1
47	50-8899-0040	Spring Guide	1
48	50-8800-1016	Guardbolt Guide	1
49	50-8800-7014	Guardbolt	1
50	81-00X2-0404	Armor Front Screw	2
51	50-8800-1034	Knob Hub	2
52	50-4601-1005	Knob Hub Spacer	1
53	50-8899-0059	Latch Lever	1
54	50-8899-0061	Latch Lever Spring	1
55	50-8899-0060	Spacer Stop	1
56	50-8800-1031	SL Hub Spacer	1

8829

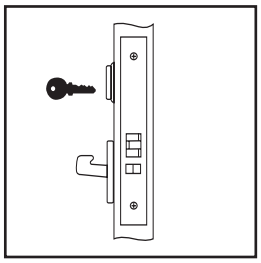

Closet Lock

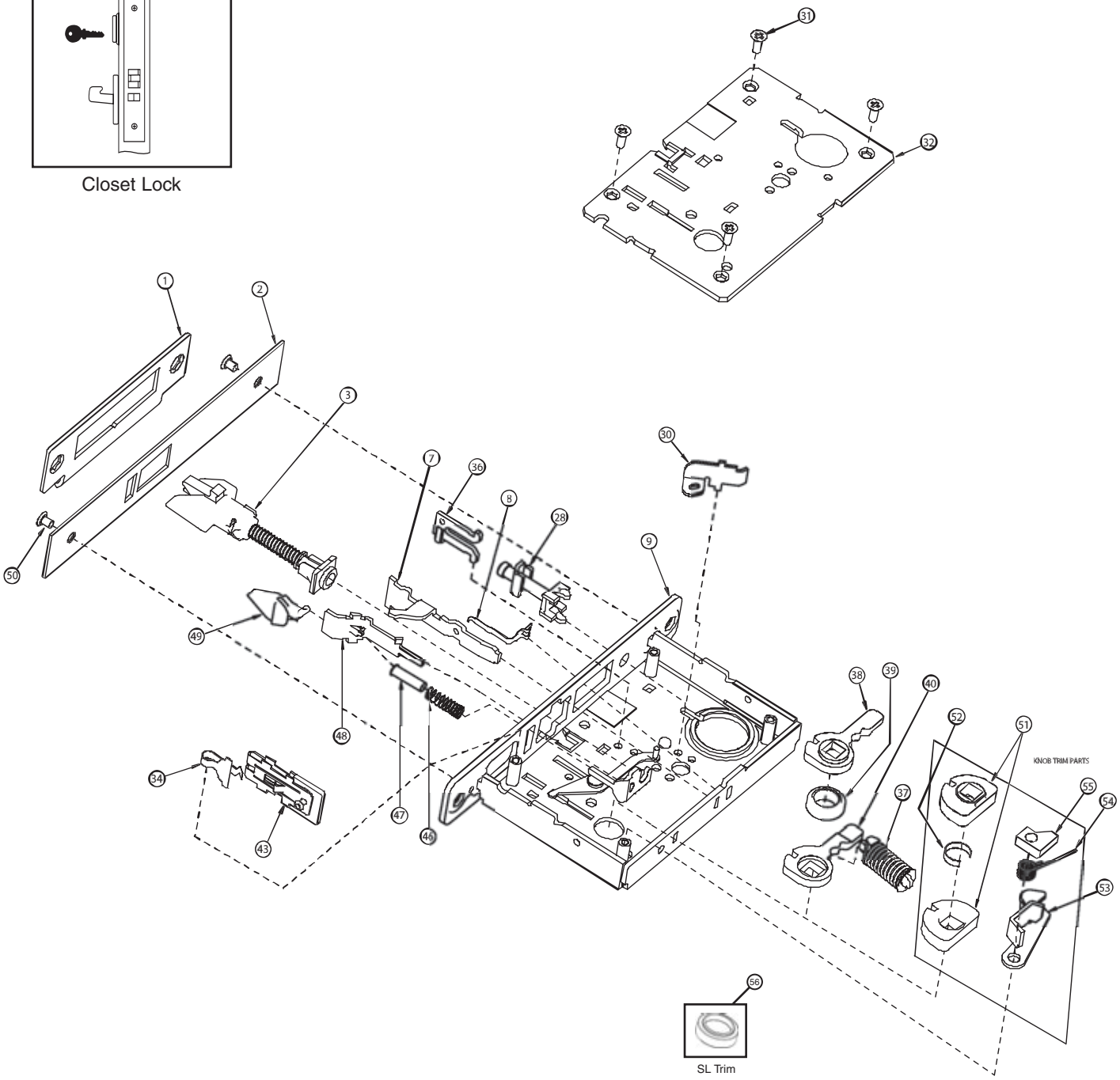

8830-2

ITEM	PART NUMBER	DESCRIPTION	QUANTITY
1	50-8800-2023	Strike, Curved Lip	1
2	50-8805-X019	Armor Front	1
3	50-8800-0010	Reversible Latchbolt Assembly	1
7	50-8899-0007	Guard Lever	1
8	50-8899-0008	Guard Lever Spring	1
9	50-8800-0001	Case Assembly	1
16	50-8899-0015	Spacer (1/2 Width)	1
28	50-8899-0023	Cylinder Retainer Assembly	1
31	50-8899-0029	Machine Screw (8-32 x 5/16)	4
32	50-8800-1008	Cover	1
33	50-8899-0030	Locking Piece Jamb	1
36	50-8899-0033	Fire Stop Assembly	1
37	50-8899-0034	Spring Cartridge Assembly	1
38	50-8800-1005	Cap Hub	1
39	50-8800-1011	Spacer, Hub	1
40	50-8800-1004	Case Hub	1
43	50-8899-0036	Locking Piece Assembly (Solid)	1
46	50-8899-0039	Guardbolt Spring	1
47	50-8899-0040	Spring Guide	1
48	50-8800-1016	Guardbolt Guide	1
49	50-8800-7014	Guardbolt	1
50	81-00X2-0404	Armor Front Screw	2
51	50-8800-1034	Knob Hub	2
52	50-4601-1005	Knob Hub Spacer	1
53	50-8899-0059	Latch Lever	1
54	50-8899-0061	Latch Lever Spring	1
55	50-8899-0060	Spacer Stop	1
56	50-8800-1031	SL Hub Spacer	1

8830-2

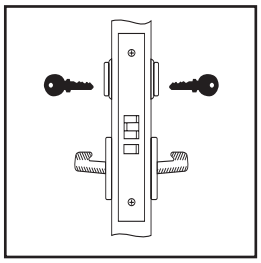

Asylum Lock

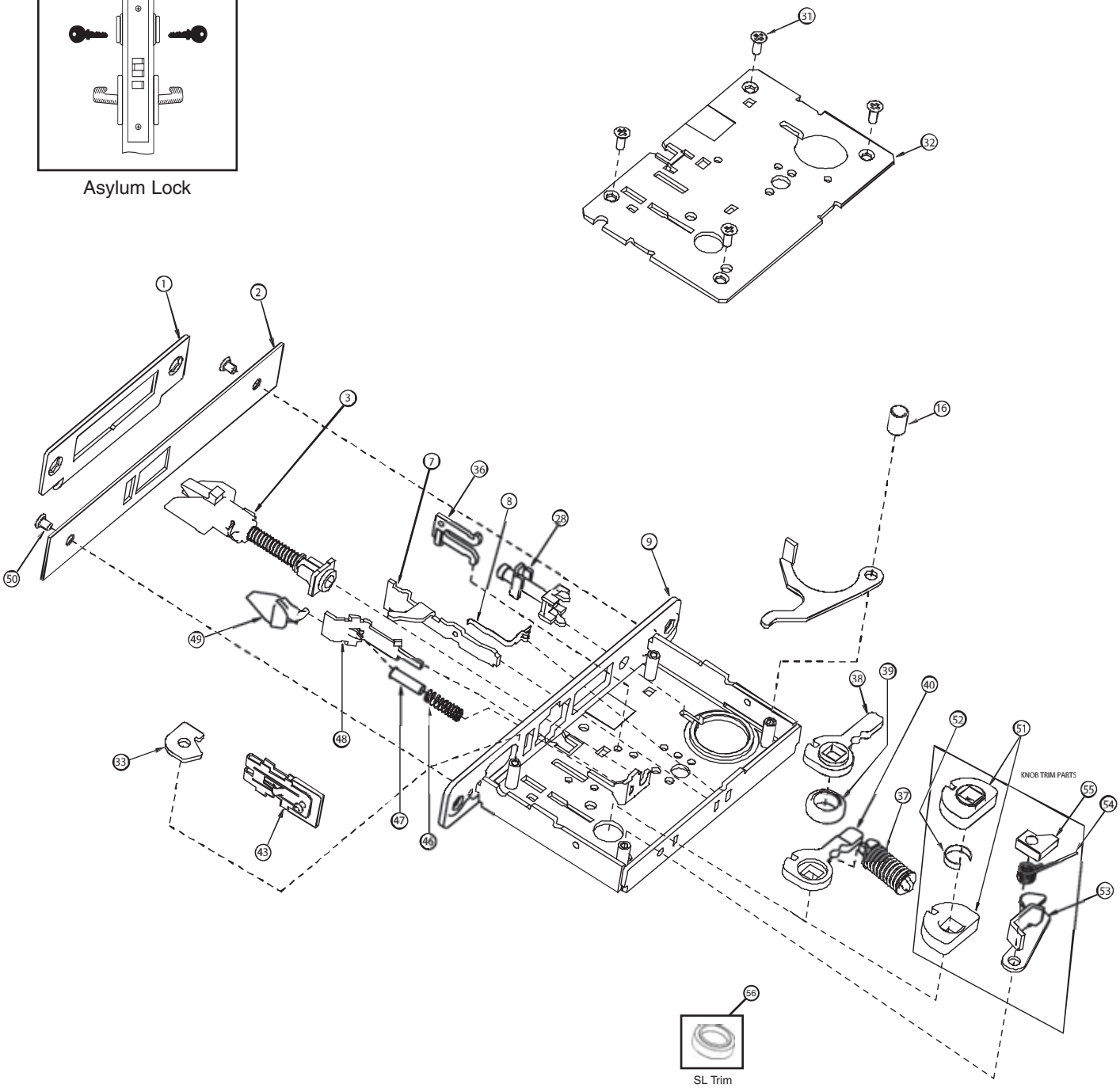

8833/8833-2

ITEM	PART NUMBER	DESCRIPTION	QUANTITY
1	50-8800-2023	Strike, Curved Lip	1
2	50-8805-X019	Armor Front	1
3	50-8800-0010	Reversible Latchbolt Assembly	1
7	50-8899-0007	Guard Lever	1
8	50-8899-0008	Guard Lever Spring	1
9	50-8800-0001	Case Assembly	1
16	50-8899-0015	Spacer (1/2 Width)	1
28	50-8899-0023	Cylinder Retainer Assembly	1
31	50-8899-0029	Machine Screw (8-32 x 5/16)	4
32	50-8800-1008	Cover	1
36	50-8899-0033	Fire Stop Assembly	1
37	50-8899-0034	Spring Cartridge Assembly	1
38	50-8800-1005	Cap Hub	1
39	50-8800-1011	Spacer, Hub	1
40	50-8800-1004	Case Hub	1
46	50-8899-0039	Guardbolt Spring	1
47	50-8899-0040	Spring Guide	1
48	50-8800-1016	Guardbolt Guide	1
49	50-8800-7014	Guardbolt	1
50	81-00X2-0404	Armor Front Screw	2
51	50-8800-1034	Knob Hub	2
52	50-4601-1005	Knob Hub Spacer	1
53	50-8899-0059	Latch Lever	1
54	50-8899-0061	Latch Lever Spring	1
55	50-8899-0060	Spacer Stop	1
56	50-8800-1031	SL Hub Spacer	1

8833/8833-2

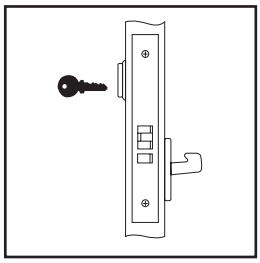

Exit Lock

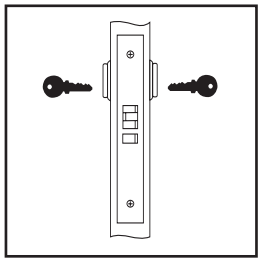

All Purpose Lock

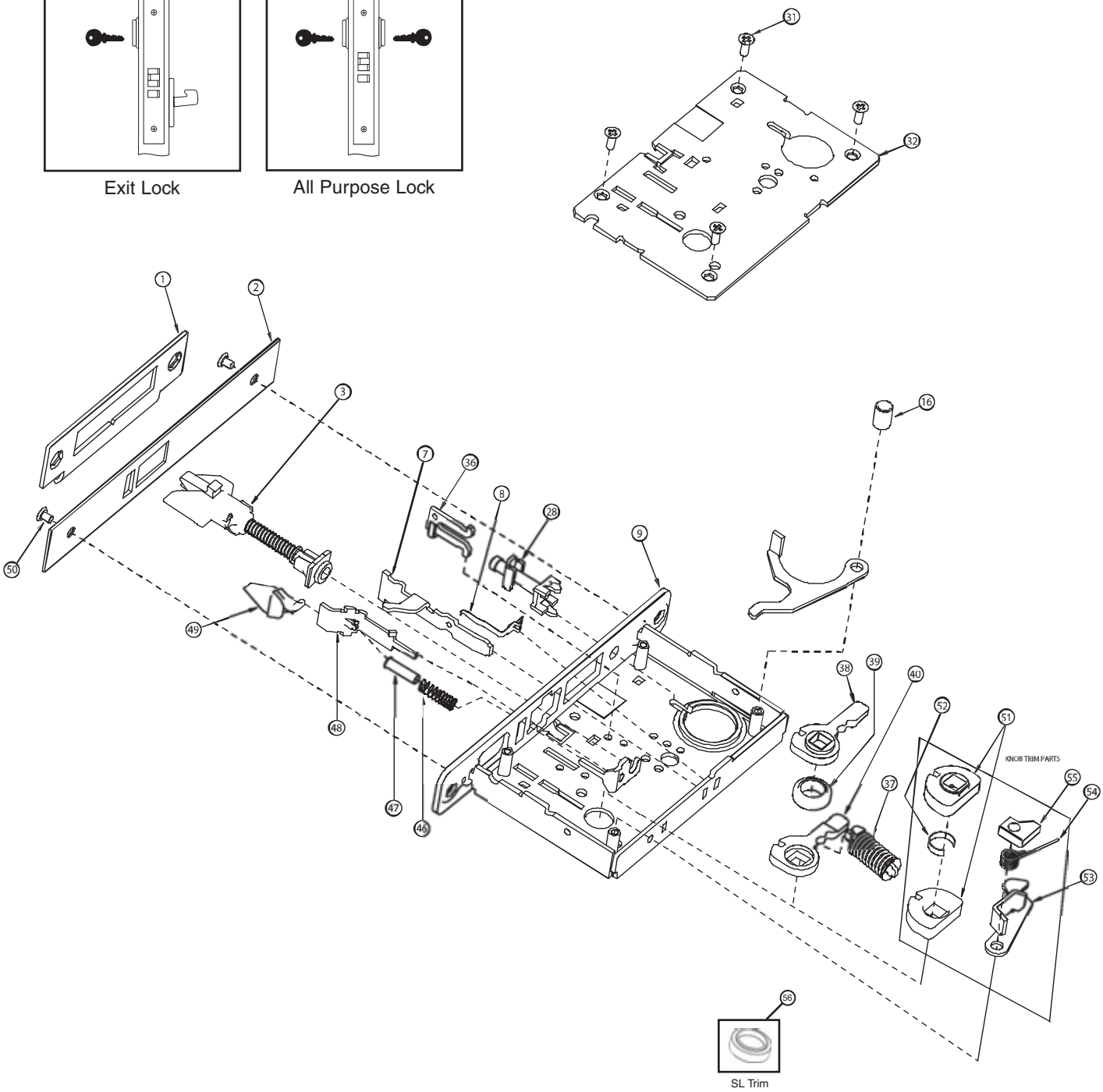

8847

ITEM	PART NUMBER	DESCRIPTION	QUANTITY
1	50-8800-2023	Strike, Curved Lip	1
2	50-8847-X019	Armor Front	1
3	50-8800-0010	Reversible Latchbolt Assembly	1
6	50-8800-0021	Deadbolt with Retraction Lever	1
7	50-8899-0007	Guard Lever	1
8	50-8899-0008	Guard Lever Spring	1
9	50-8800-0002	Case Assembly	1
13	50-8899-0012	Cylinder Latch Lever	1
18	50-8899-0016	Spacer (7/16 Width)	1
21	50-8800-1120	Deadbolt Hub	1
23	50-8899-0018	Deadbolt Arm	1
24	50-8899-0019	Deadbolt Spring	1
25	50-8899-0020	Auto Retract Lever	1
26	50-8899-0021	Deadbolt Washer	1
28	50-8899-0023	Cylinder Retainer Assembly	1
31	50-8899-0029	Machine Screw (8-32 x 5/16)	4
32	50-8800-1008	Cover	1
34	50-8899-0031	Toggle Spring	1
36	50-8899-0033	Fire Stop Assembly	1
37	50-8899-0034	Spring Cartridge Assembly	1
38	50-8800-1005	Cap Hub	1
39	50-8800-1011	Spacer, Hub	1
40	50-8800-1004	Case Hub	1
41	50-8899-0035	Connector Pin, Toggle Button	1
42	50-8899-0036	Locking Piece Assembly	1
44	50-8899-0038	Toggle Washer	1
45	50-8800-6003	Stopworks Button	1
46	50-8899-0039	Guardbolt Spring	1
47	50-8899-0040	Spring Guide	1
48	50-8800-1016	Guardbolt Guide	1
49	50-8800-7014	Guardbolt	1
50	81-00X2-0404	Armor Front Screw	2
51	50-8800-1034	Knob Hub	2
52	50-4601-1005	Knob Hub Spacer	1
53	50-8899-0059	Latch Lever	1
54	50-8899-0061	Latch Lever Spring	1
55	50-8899-0060	Spacer Stop	1
56	50-8800-1031	SL Hub Spacer	1

8847

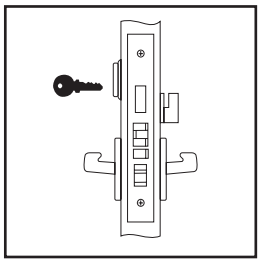

Entrance or
Apartment Door Lock
(F20)

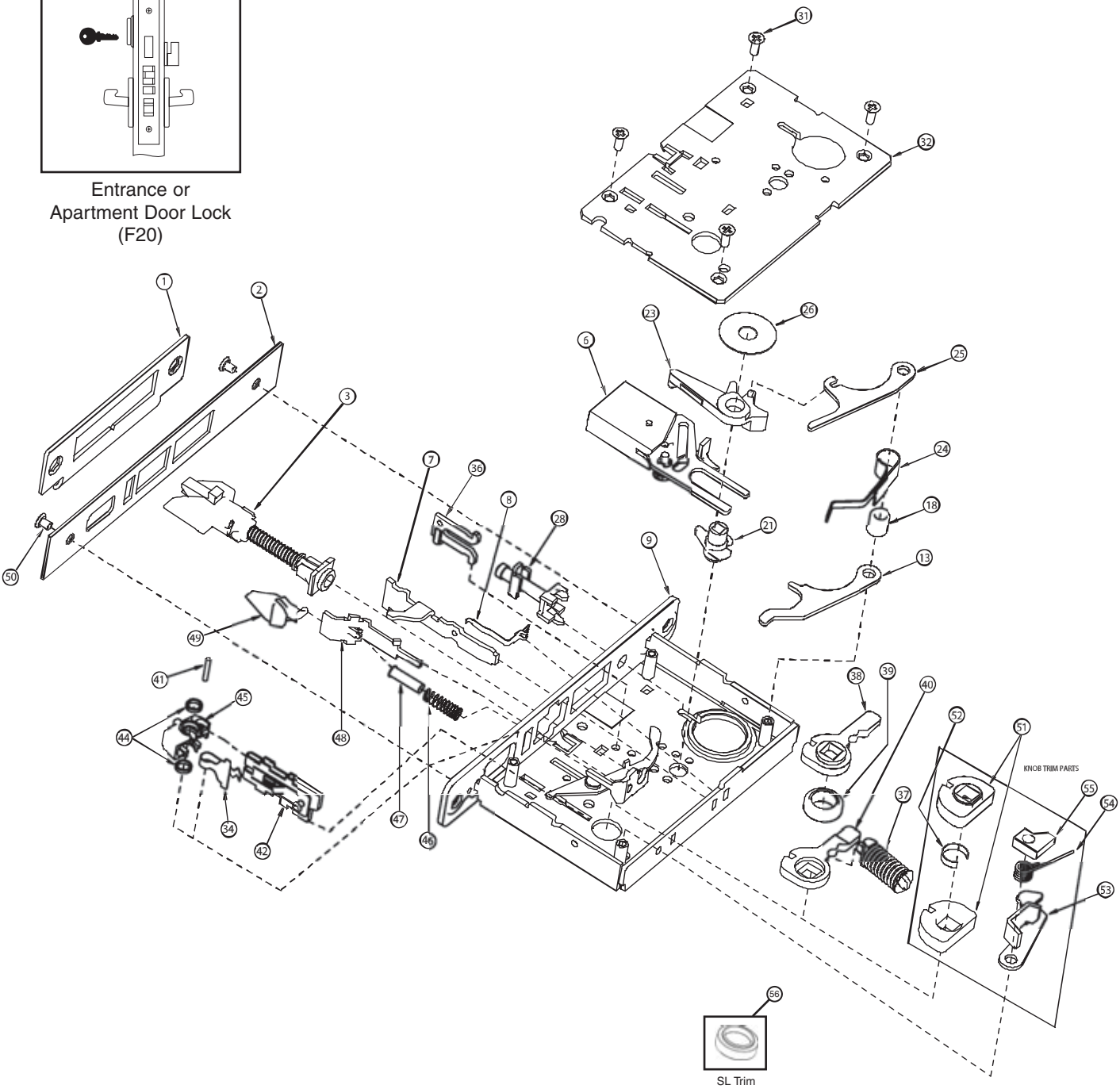

8860/8860-2

ITEM	PART NUMBER	DESCRIPTION	QUANTITY
1	50-8800-2023	Strike, Curved Lip	1
2	50-8820-X019	Armor Front	1
3	50-8800-0010	Reversible Latchbolt Assembly	1
5	50-8899-0002	Deadbolt Assembly	1
9	50-8800-0001	Case Assembly	1
10	50-8899-0009	Washer	1
15	50-8899-0014	Spacer (Classroom)	1
21	50-8800-1120	Deadbolt Hub	1
23	50-8899-0018	Deadbolt Arm	1
24	50-8899-0019	Deadbolt Spring	1
28	50-8899-0023	Cylinder Retainer Assembly	1
31	50-8899-0029	Machine Screw (8-32 x 5/16)	4
32	50-8800-1008	Cover	1
35	50-8899-0032	Unlock Spring	1
36	50-8899-0033	Fire Stop Assembly	1
37	50-8899-0034	Spring Cartridge Assembly	1
38	50-8800-1005	Cap Hub	1
39	50-8800-1011	Spacer, Hub	1
40	50-8800-1004	Case Hub	1
42	50-8899-0036	Locking Piece Assembly	1
50	81-00X2-0404	Armor Front Screw	2
51	50-8800-1034	Knob Hub	2
52	50-4601-1005	Knob Hub Spacer	1
53	50-8899-0059	Latch Lever	1
54	50-8899-0061	Latch Lever Spring	1
55	50-8899-0060	Spacer Stop	1
56	50-8800-1031	SL Hub Spacer	1

8860/8860-2

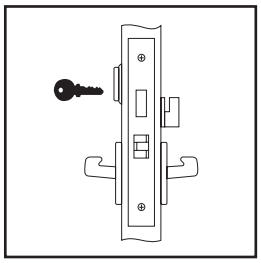

Entrance or
Storeroom Lock (F21)

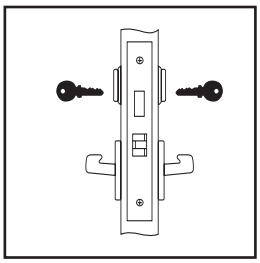

Entrance or
Storeroom Lock (F14)

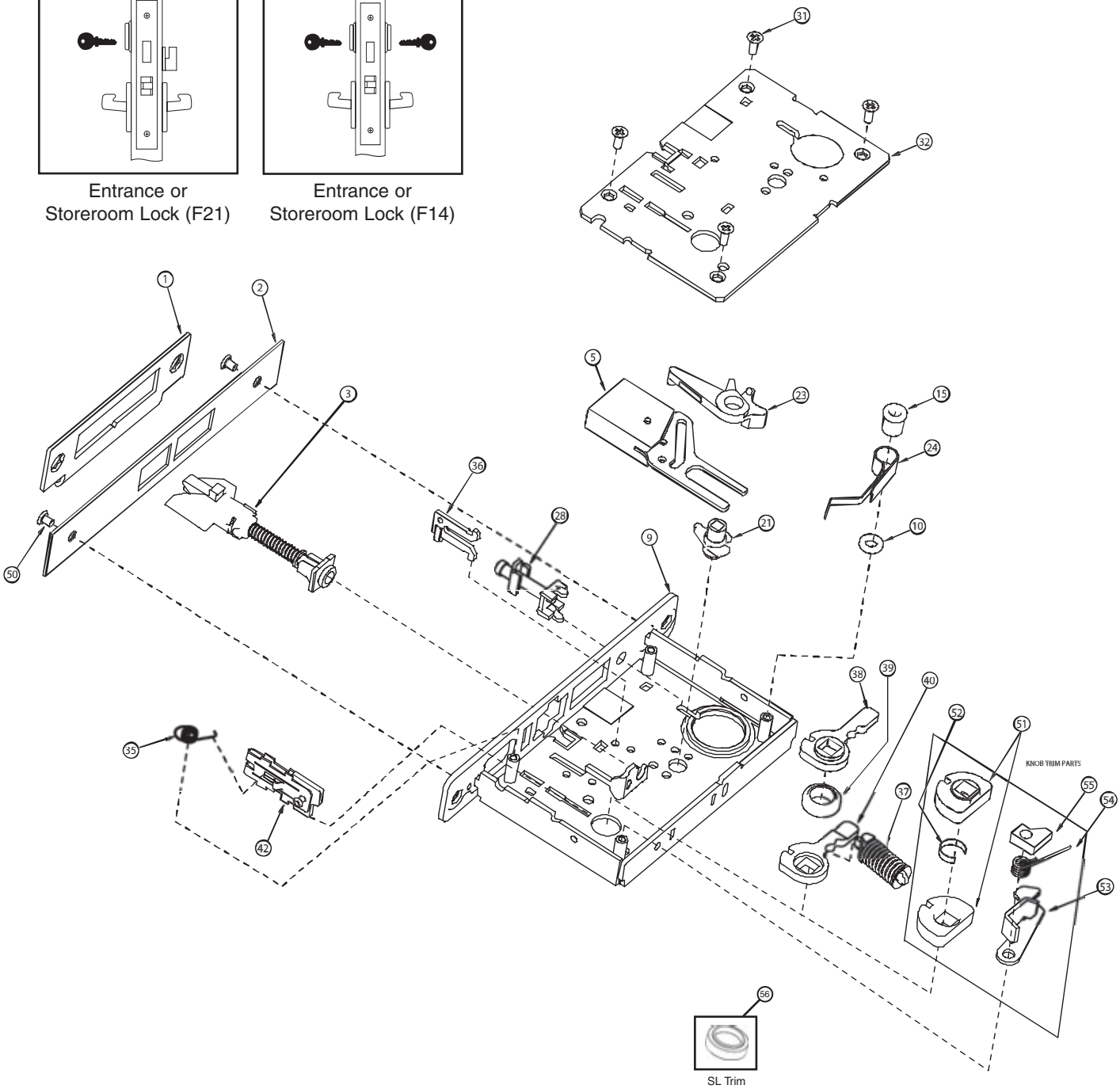

8861

ITEM	PART NUMBER	DESCRIPTION	QUANTITY
1	50-8800-2023	Strike, Curved Lip	1
2	50-8802-X019	Armor Front	1
3	50-8800-0010	Reversible Latchbolt Assembly	1
4	50-8899-0001	Auto Unlock Insert	1
5	50-8899-0002	Deadbolt Assembly	1
9	50-8800-0002	Case Assembly	1
10	50-8899-0009	Washer	1
15	50-8899-0014	Spacer (Classroom)	1
21	50-8800-1120	Deadbolt Hub	1
23	50-8899-0018	Deadbolt Arm	1
24	50-8899-0019	Deadbolt Spring	1
28	50-8899-0023	Cylinder Retainer Assembly	1
31	50-8899-0029	Machine Screw (8-32 x 5/16)	4
32	50-8800-1008	Cover	1
35	50-8899-0032	Unlock Spring	1
36	50-8899-0033	Fire Stop Assembly	1
37	50-8899-0034	Spring Cartridge Assembly	1
38	50-8800-1005	Cap Hub	1
39	50-8800-1011	Spacer, Hub	1
40	50-8800-1004	Case Hub	1
42	50-8899-0036	Locking Piece Assembly	1
50	81-00X2-0404	Armor Front Screw	2
51	50-8800-1034	Knob Hub	2
52	50-4601-1005	Knob Hub Spacer	1
53	50-8899-0059	Latch Lever	1
54	50-8899-0061	Latch Lever Spring	1
55	50-8899-0060	Spacer Stop	1
56	50-8800-1031	SL Hub Spacer	1

8861

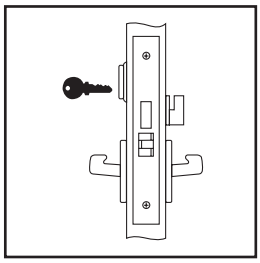

Dormitory or
Storeroom Lock

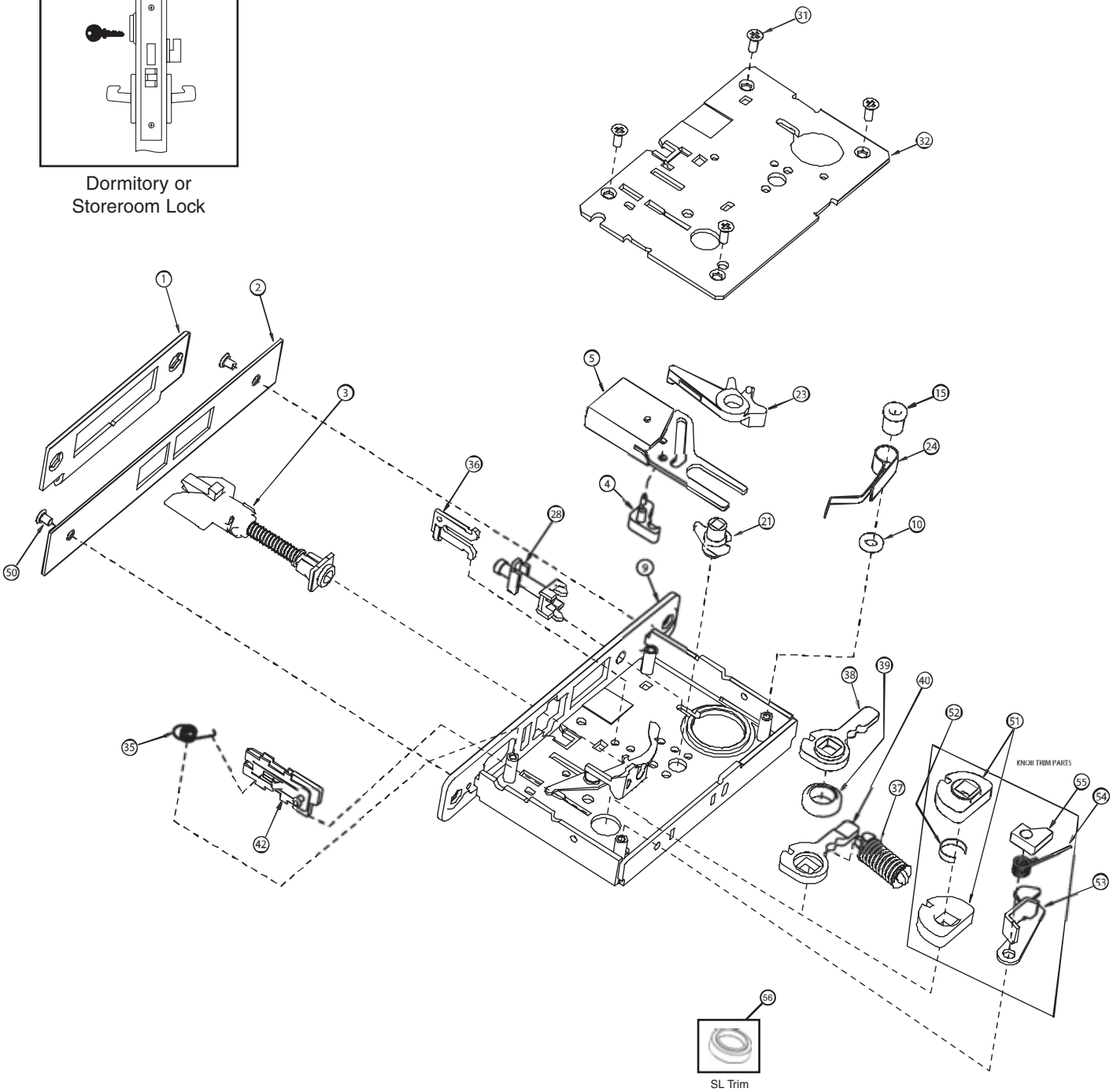

8862

ITEM	PART NUMBER	DESCRIPTION	QUANTITY
1	50-8800-2023	Strike, Curved Lip	1
2	50-8801-X019	Armor Front	1
3	50-8800-0010	Reversible Latchbolt Assembly	1
9	50-8800-0003	Case Assembly	1
10	50-8899-0009	Washer	1
15	50-8899-0014	Spacer (Classroom)	1
20	50-8800-1015	Classroom Hub	1
22	50-8899-0017	Classroom Spring	1
27	50-8899-0022	Push Lever (65 Function)	1
31	50-8899-0029	Machine Screw (8-32 x 5/16)	4
32	50-8800-1008	Cover	1
34	50-8899-0031	Toggle Spring	1
36	50-8899-0033	Fire Stop Assembly	1
37	50-8899-0034	Spring Cartridge Assembly	1
38	50-8800-1005	Cap Hub	1
39	50-8800-1011	Spacer, Hub	1
40	50-8800-1004	Case Hub	1
42	50-8899-0036	Locking Piece Assembly	1
50	81-00X2-0404	Armor Front Screw	2
51	50-8800-1034	Knob Hub	2
52	50-4601-1005	Knob Hub Spacer	1
53	50-8899-0059	Latch Lever	1
54	50-8899-0061	Latch Lever Spring	1
55	50-8899-0060	Spacer Stop	1
56	50-8800-1031	SL Hub Spacer	1

8862

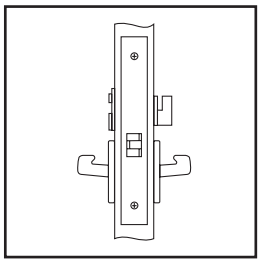

Bathroom Lock (F22)

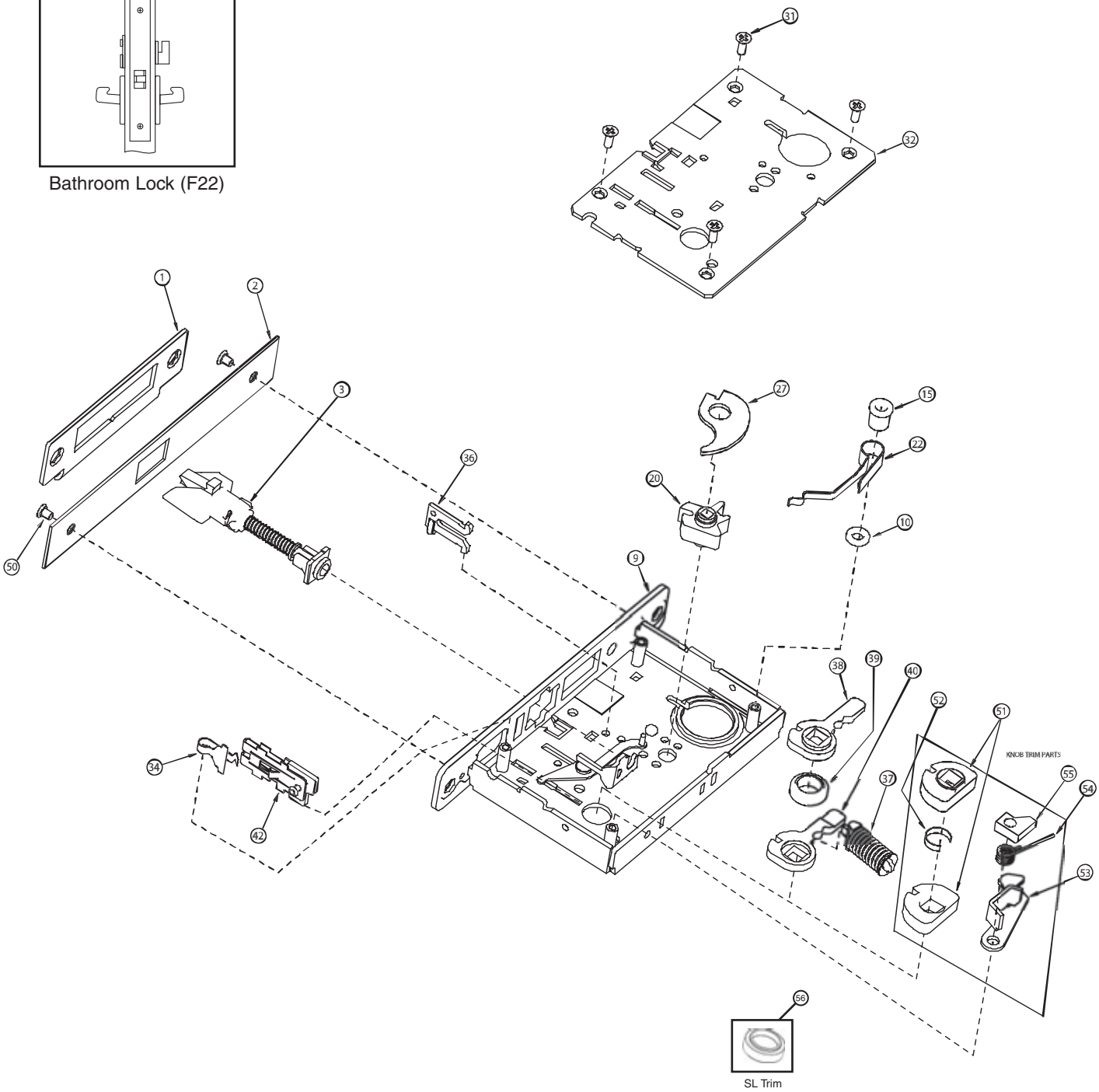

8867

ITEM	PART NUMBER	DESCRIPTION	QUANTITY
1	50-8800-2023	Strike, Curved Lip	1
2	50-8867-X019	Armor Front	1
3	50-8800-0010	Reversible Latchbolt Assembly	1
6	50-8800-0021	Deadbolt with Retraction Lever	1
9	50-8800-0002	Case Assembly	1
13	50-8899-0012	Cylinder Latch Lever	1
18	50-8899-0016	Spacer (7/16 Width)	1
21	50-8800-1120	Deadbolt Hub	1
23	50-8899-0018	Deadbolt Arm	1
24	50-8899-0019	Deadbolt Spring	1
25	50-8899-0020	Auto Retract Lever	1
26	50-8899-0021	Deadbolt Washer	1
28	50-8899-0023	Cylinder Retainer Assembly	1
31	50-8899-0029	Machine Screw (8-32 x 5/16)	4
32	50-8800-1008	Cover	1
34	50-8899-0031	Toggle Spring	1
36	50-8899-0033	Fire Stop Assembly	1
37	50-8899-0034	Spring Cartridge Assembly	1
38	50-8800-1005	Cap Hub	1
39	50-8800-1011	Spacer, Hub	1
40	50-8800-1004	Case Hub	1
41	50-8899-0035	Connector Pin, Toggle Button	1
42	50-8899-0036	Locking Piece Assembly	1
44	50-8899-0038	Toggle Washer	1
45	50-8800-6003	Stopworks Button	1
50	81-00X2-0404	Armor Front Screw	2
51	50-8800-1034	Knob Hub	2
52	50-4601-1005	Knob Hub Spacer	1
53	50-8899-0059	Latch Lever	1
54	50-8899-0061	Latch Lever Spring	1
55	50-8899-0060	Spacer Stop	1
56	50-8800-1031	SL Hub Spacer	1

8867

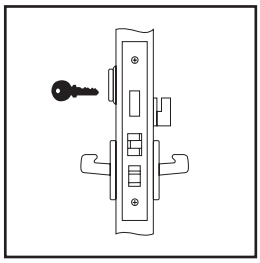

Dormitory or Exit Lock
(F12)

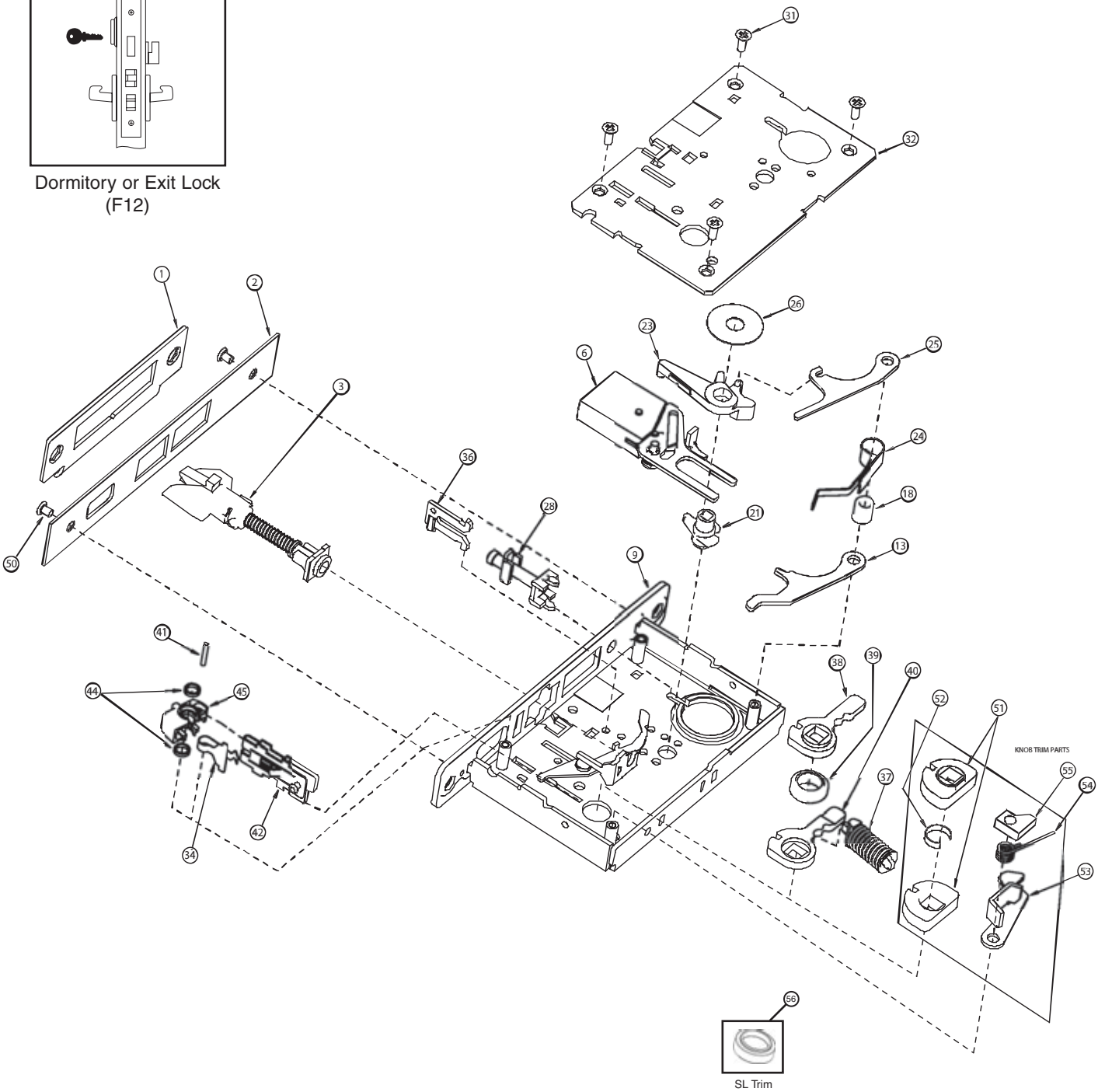

INSTALLATION INSTRUCTIONS

Yale® Mortise Locks
8800 Series (Knob, FL and SL Trim)

NOTES
The following is a step by step approach to installing a mortise lock and trim to both wood and steel doors.

1) Determine Hand of Door
2) Mark Position and Door Template
3) Drill Holes in Door
4) Mark Frame for Strike and Mortise Cavities
5) Drill Mortise Cavities in Door and Frame
6) Install Lock (Wood or H.M Door)
7) Install Strike
8) Sectional Trim
9) Escutcheon Plate Trim (Thru-bolted)
10) Escutcheon Plate Trim (Surface Mounted)
11) Single Operational Trim (Sectional and Escutcheon)
12) Check Operation of Lock

1) DETERMINE HAND OF DOOR

a. Face the door from the outside to determine its hand. Please note the outside is either the key side of an entrance door or the corridor side of a room door. The outside of a single communicating door is the side opposing the hinges. The outside of twin communicating doors is the space between the doors.

2) MARK POSITION AND DOOR TEMPLATE

a. Draw a horizontal centerline for the lock on both sides of door at desired height above finished floor line. Standard height for horizontal centerline is 39-15/16” above finished floor.
b. Select template by comparing handing of door to Fig. 4, 5 and 6.
c. Compare the lock function number being installed with (See Fig. 3) to determine the holes to be marked.
d. Position the installation template on the door so that the horizontal centerline lines up with the horizontal line on the door. Mark the holes to be drilled using a scribe, center punch, or nail on the inside and outside of door. To avoid shifting of the template, it may be taped to the door during this step.
e. On the edge of the door mark the holes to be drilled for the mortise cavity and armor front attaching screw holes.

3) DRILL HOLES IN DOOR

a. Bore marked lock trim holes (steps 2d and 2e). To avoid splintering wood, bore thru holes from both sides of door. For hole sizes refer to hole chart. Note: Hole “A” diameter is different for FL & SL Applications.

4) MARK FRAME FOR STRIKE MORTISE CAVITIES

a. Mark vertical position of strike on jamb using the reference centerline on installation template (see Fig. 4, 5 or 6). Mark location of strike lip. (FIRST DETERMINE IF SILENCERS ARE TO BE USED) To locate horizontal centerline of strike, take half the door thickness PLUS the thickness of silencer (if used). Use this dimension to locate the strike centerline from the doorstop. (See Fig. 1.)

5) DRILL MORTISE CAVITIES IN DOOR AND FRAME

a. Mortise door edge for lock body. Drill pilot holes for attaching screws.
b. Slide lock body into cavity with armor front attached. Align armor front with top mark. Use lock front as template. Mark outline.
c. Mortise door edge for lock front (7/32”) deep.
d. Mortise jamb for strike (3/32” deep). Be sure to mortise 1” (25mm) deep to accommodate lock bolts or strike box if used. (See Fig. 1)
Note: Before installing lock, prepare door trim per sections 8, 9,10 or 11.

6) INSTALL LOCK (WOOD OR H.M. DOOR)

a. Remove armor front.
b. If necessary, change handing of lock by following instructions on lock. Do this to match your door hand.
c. Insert lock body into cavity in door and secure base front with two #12 combination attaching screws. Make sure lock is positioned in cutout properly. (See Fig. 3.) Note: Installation may require leaving #12 combination screws loose until trim and cylinder are assembled in lock body.

INSTALLATION INSTRUCTIONS

7) INSTALL STRIKE

a. Attach strike to jamb using two #12 combination attaching screws. (See Fig. 1.)

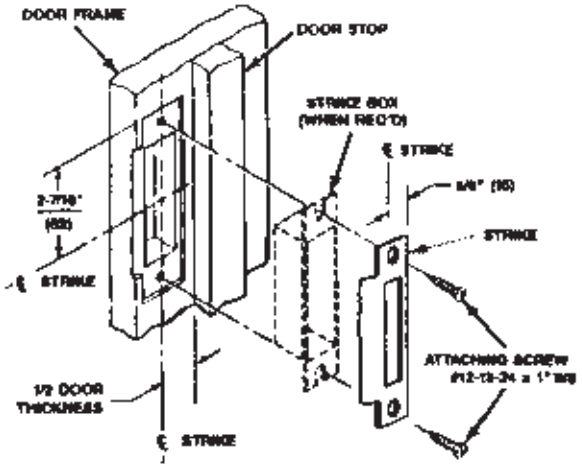

(Figure 1) 8800 Series Strike Shown

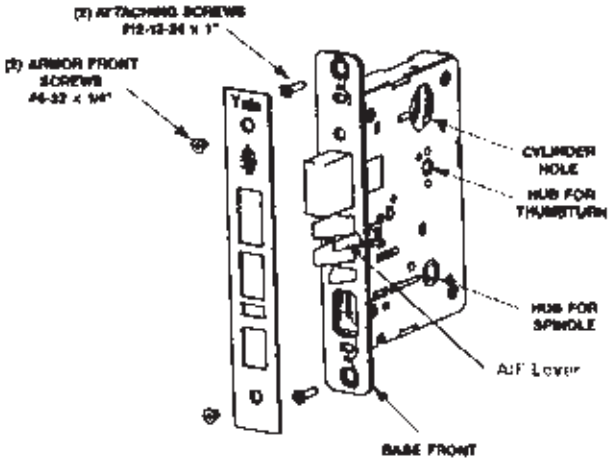

(Figure 2) 8800 Series Lock Shown

Hole Chart				
	Size			Used for
Hole	H.M. Door		Wood Door	
A	FL	1-1/8 Dia. (29)	1-1/8 Dia. (29)	Knobs
	SL	1-7/8 Dia. (48)	1-7/8 Dia. (48)	
B	1-1/4 Dia. (32)		1-1/4 Dia. (32)	Cylinder
C	3/4 Dia. (19)		3/4 Dia. (19)	Thumbturn or Emergency Key
D	3/4 Dia. (19)		3/4 Dia. (19)	Hotel Indicator
E	5/16 Dia. (8)		5/16 Dia. (8)	Rose Through-Bolts
F	.116 Dia. (2.9) #32 Drill		1/16 Dia. (1.6)	Thumbturn Plate Attaching Screws
G	1/2 Dia. (13)		1/2 Dia. (13)	Escutcheon Plate Through-Bolts
H	.116 Dia. (2.9) #32 Drill		1/16 Dia. (1.6)	Surface Escutcheon Plate Attaching
J	.152 Dia. (3.9) #24 Drill		11/64x1 Dp. (4.4x25) C'bore 1/2x1/8 Dp. (13x3)	Surface Escutcheon Plate Attaching
K	106 Dia. (2.7) #36 Drill Tap (#6-32 UNC)		1/16 Dia. (1.6)	8862 Visual Indicator (See Step 12)

Lock Function (Knob, FL and SL)	Holes in Door Sectional Trim		Holes in Door Through-Bolted Esc.		Holes in Door Surface Esc.	
	Outside	Inside	Outside	Inside	Outside	Inside
8801, 8870DT, 8871DT 8872DT, 8880, 8881 8884, 8885, 836A & B 836A & B	A, E	A, E	A, G	A, G	A, H	A, E, H
8802	A, C, E, F	A, C, E, F	A, C, E, F	A, C, E, F	A, C, E, F	A, C, E, F
8805, 8807, 8808	A, B, E	A, E,	A, B, G	A, G	A, B, H	A, H
8890, 8891	A, B*, E	A, B*, E	A, B*, G	A, B*, G	A, B*, H	A, B*, H
8808-2, 8810-2, 8811-2 8812-2, 8817-2, 8818-2 8830-2, 8860-2, 8894-2 8895-2	A, B, E	A, B, E	A, B, G	A, B, G	A, B, H	A, B, H
8820, 8827	A, C, D, E	A, C, E, F	A, B, D, G	A, C, G	A, B, D, H	A, C, H
8811, 8822, 8832 8847, 8860, 8861 8867	A, B, E	A, C, E, F	A, B, G	A, C, G	A, B, H	A, B, H
8828	NONE	A, E	NONE	A, J**	NONE	A, H
8833	B ONLY	A, E	B ONLY	A, J**	B ONLY	A, H
8823, 8829	A, B, E	NONE	B ONLY	A, B, J**	B ONLY	A, B, H
8813ST-2, 8829	B ONLY	C, F, B	—	—	—	—
8814	B ONLY	NONE	—	—	—	—
8814-2, 8833-2	B ONLY	B ONLY	—	—	—	—
8862	A, D, E, K	A, C, E, F	—	—	—	—

* Lock can be mounted with cylinder outside or inside. Check for proper application.
** CO 7 WG Escutcheon plates cannot be used as half trim on H.M. Doors.

(Figure 3)

INSTALLATION INSTRUCTIONS

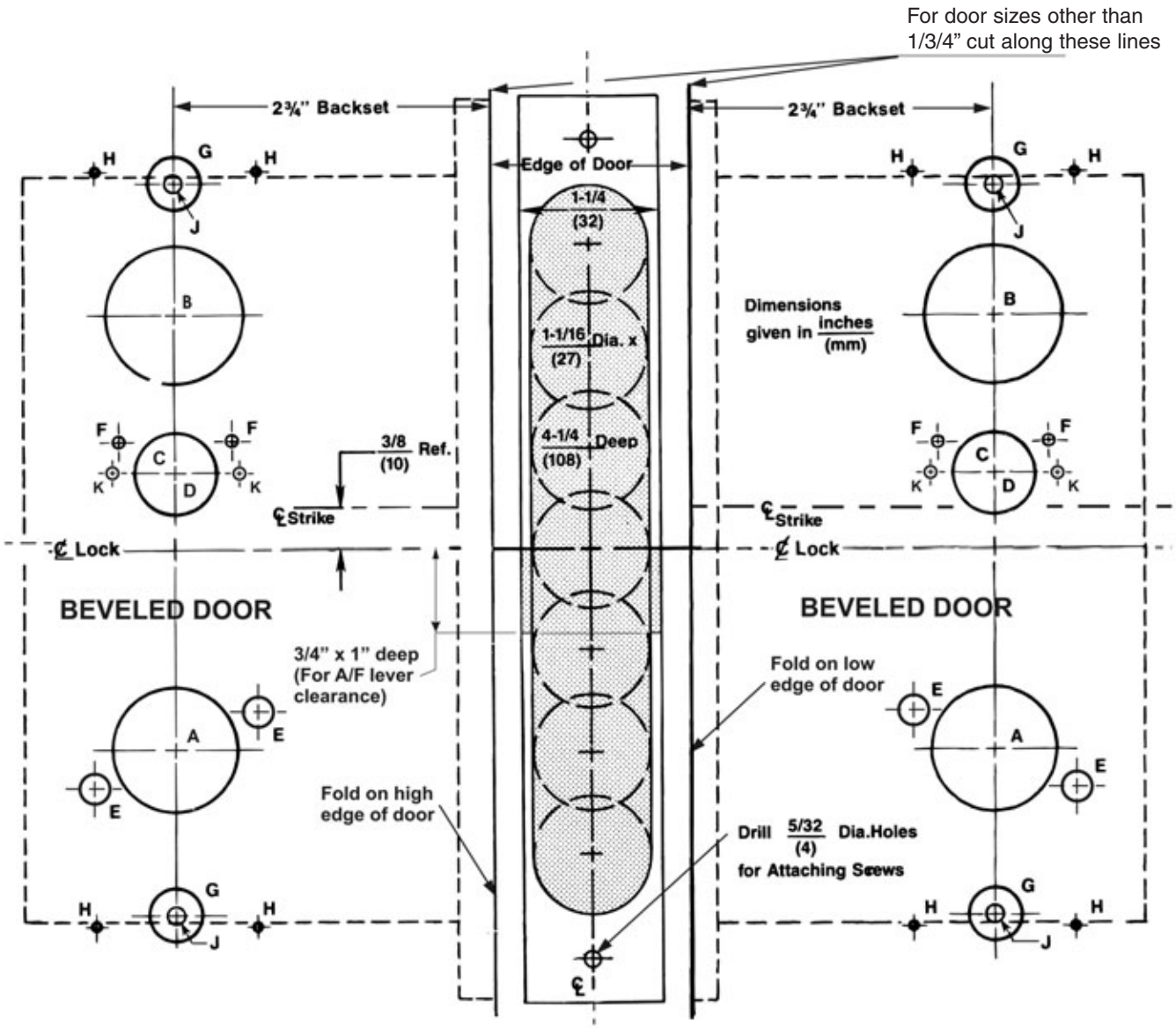

(Figure 4) RH & LHR Door ONLY

INSTALLATION INSTRUCTIONS

For door sizes other than
1/3/4" cut along these lines

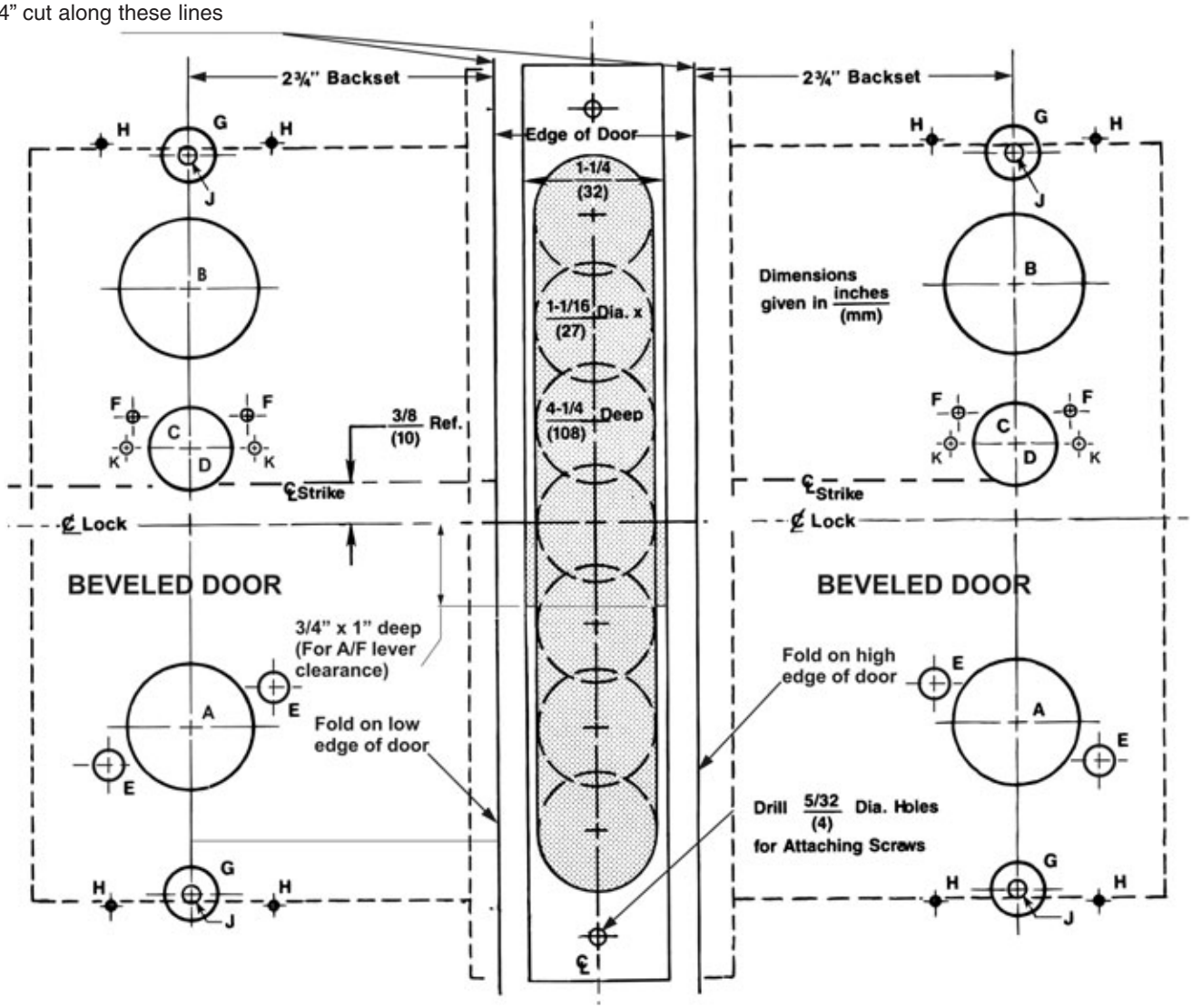

(Figure 5) LH & RHR Door ONLY

INSTALLATION INSTRUCTIONS

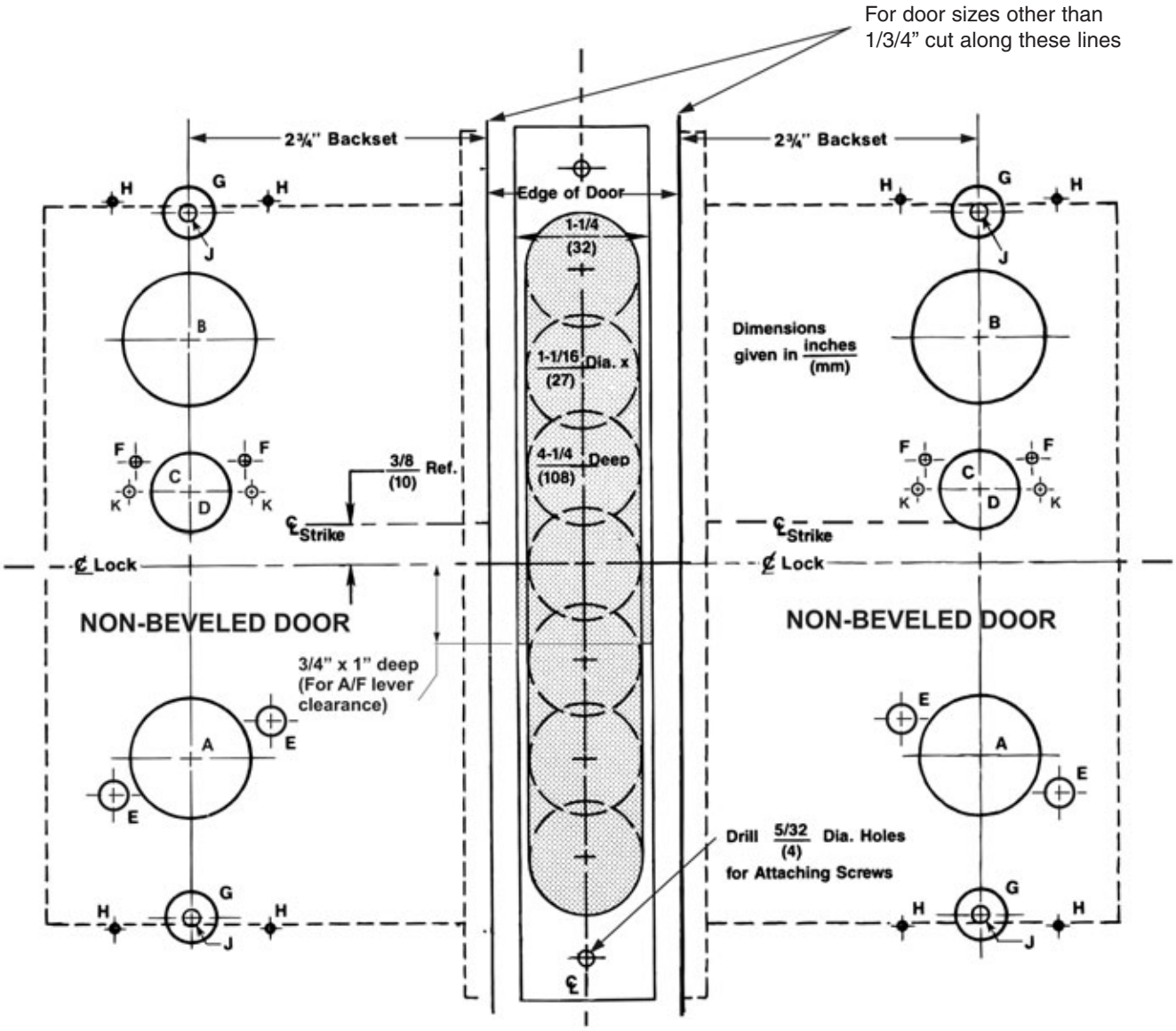

(Figure 6) Non-Beveled Door

INSTALLATION INSTRUCTIONS

8) SECTIONAL TRIM

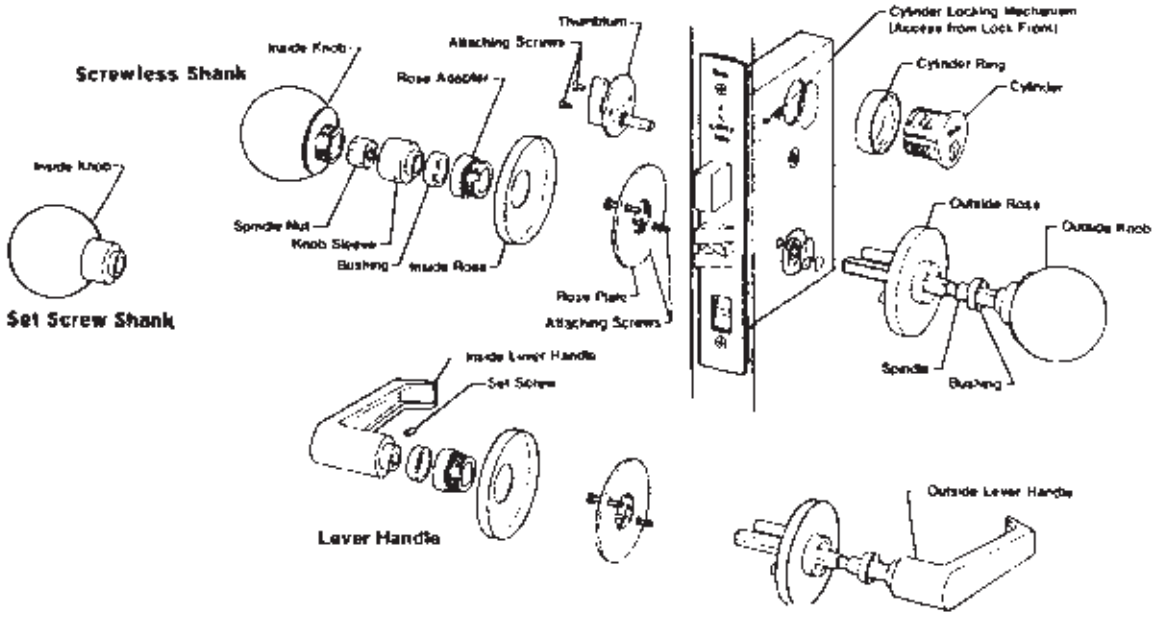

9) ESCUTCHEON PLATE TRIM (THROUGH-BOLTED)

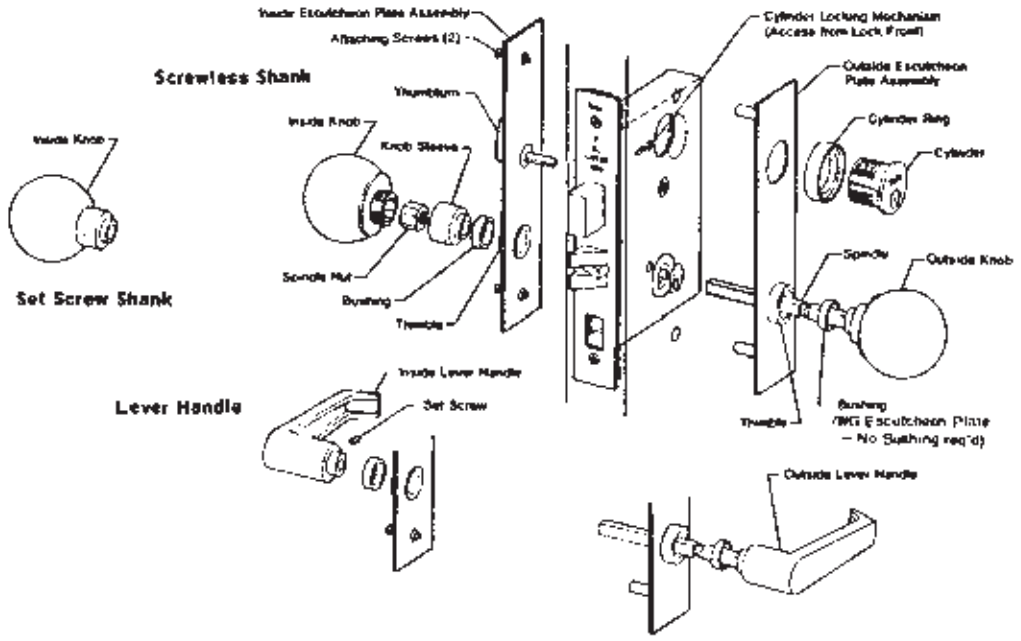

INSTALLATION INSTRUCTIONS

10) ESCUTCHEON PLATE TRIM (SURFACE-MOUNTED)

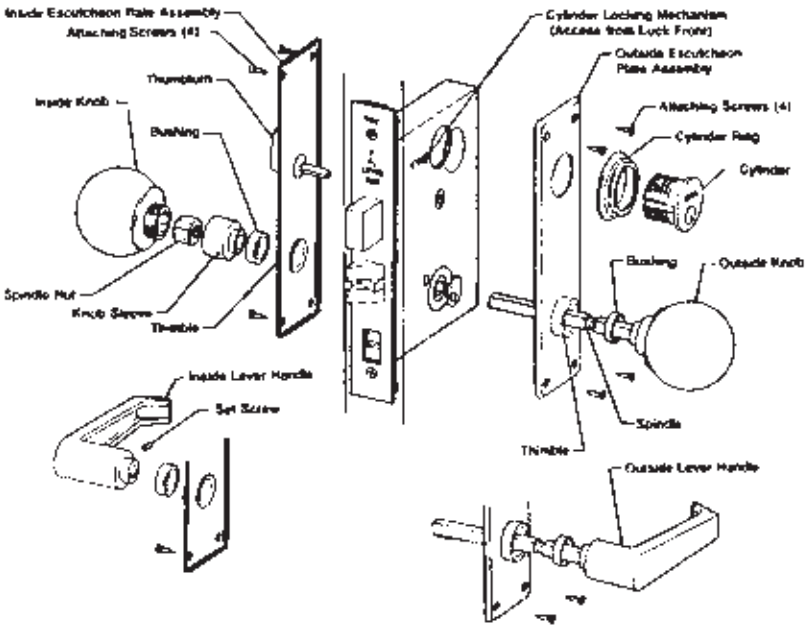

11) SINGLE OPERATING TRIM (SECTIONAL & ESCUTCHEON)

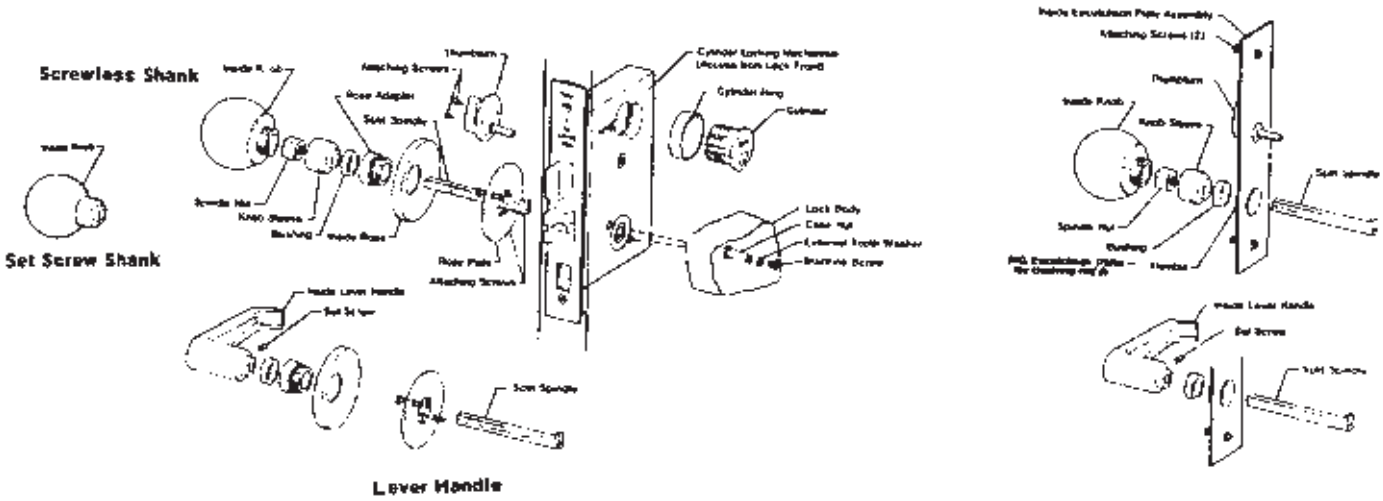

INSTALLATION INSTRUCTIONS

RAMPED SPINDLE ASSEMBLY

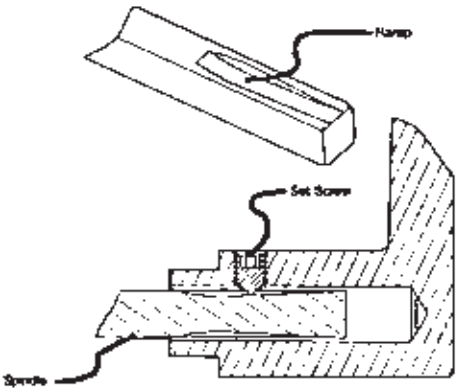

12) VISUAL OCCUPANCY INDICATOR

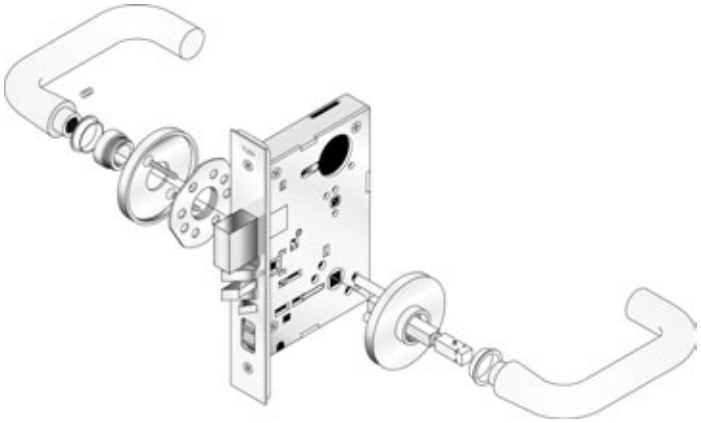

Installation Trouble Shooting Tips		
Problem	Possible Cause	Solution
Difficult to operate lock by lever or by key.	Loose (Trim H.M. Doors) (Vibration caused by normal operation of door opening and closing can loosen attaching screws)	Adjust and tighten - as necessary. If screws continually loosen up, use a screw locking compound (such as Loctite) on all attaching screws.
	Door is warped or sagging, binding up latch bolt in strike cutout.	Check to see where latch is hanging up in strike. If door is sagging, tightening top hinge screws may solve problem. Hole in strike plate mave have to be filed to relieve bind. Doors can warp when weather changes: warm inside - cold outside cool inside - hot outside (Exterior doors painted in a dark color are particularly susceptible to warpage when exposed to direct sunlight.) It may take a few seasonal changes to work out all binding problems.
Loose Trim (wood doors)	Wood doors after being installed will sometimes shrink slightly as the building dries out.	Tighten all screws as needed
Latch bolt hangs up in lock body	Foreign object in lock body (metal shavings, saw dust, wood particles, mineral ore etc.)	Remove lock from door and remove foreign object from body. *Lubricate if necessary.
	Lock body lacks lubrication or lubrication has gummed up with age.	Use penetrating or solvent type lubricant as a cleaning agent to loosen frozen or sticking components. Lubricate with silicon base or Lithium Grease.
Cylinder jams up	Dirt or other foreign object may be in keyway affecting operation.	Lubricate cylinder with graphite or other non-oily lubricant (such as Lock-EZE) Do not use oil based lubricants in Keyway.

* Please note: Disassembling lock body will void warranty.

online literature and templates

For the latest information on Yale Commercial Lock and Hardware products, visit our website at www.yalecommercial.com.

Click on the "Literature" button to find:

- Catalogs
- Parts manuals
- Templates
- Specifications
- Installation instructions

Yale® customers can click on the ebusiness symbol on the website to register for an ebusiness account to:

- Check the status of orders
- Check availability of Quick Ship items
- Track your order and confirm delivery
- Receive email notification of template changes

And More...

www.yalecommercial.com

Yale Commercial Locks and Hardware

Address: 1902 Airport Road, Monroe, NC 28110 USA

Tel: 1-800-438-1951 ● *Fax:* 1-800-338-0965 ● www.yalecommercial.com

Yale-Corbin Canada Ltd.

Address: 6940 Edwards Boulevard, Mississauga, Ontario, Canada L5T 2W2

Tel: 1-800-461-3007 ● *Fax:* 1-800-461-8989 ● www.yalecorbin.on.ca

Yale® and Yale Security Inc.® are registered trademarks of Yale Security Inc. Other products brand names may be trademarks or registered trademarks of their respective owners and are mentioned for reference purposes only. Copyright© 2004 Yale Security Inc. All rights reserved. These materials are protected under US copyright laws. All contents current at time of publication. Yale Security Inc. reserves the right to change availability of any item in this bulletin, its design, construction, and/or its materials.

The ASSA ABLOY Group is the world's leading manufacturer and supplier of locking solutions, dedicated to satisfying end-user needs for security, safety and convenience.

An ASSA ABLOY Group brand

ASSA ABLOY

42192-MA-12.2-08/04N